COMBINATION

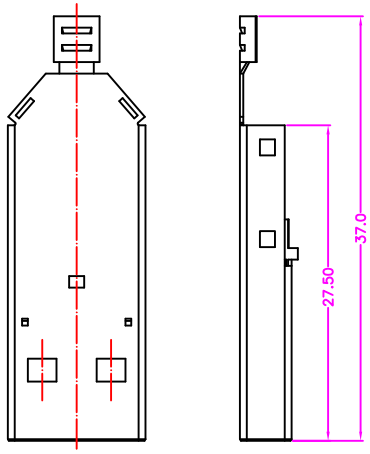

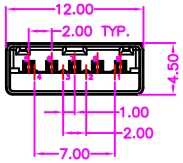

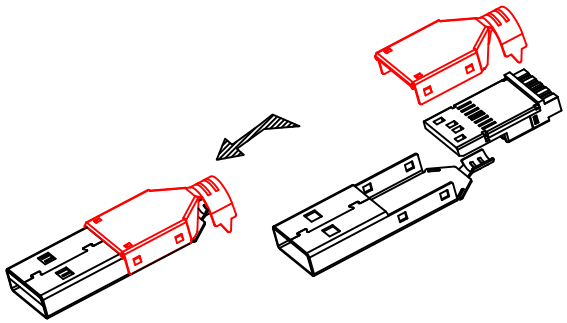

PARTS

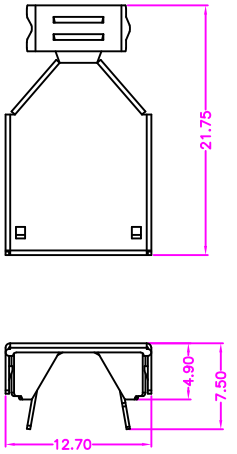

REAR METAL SHIELD

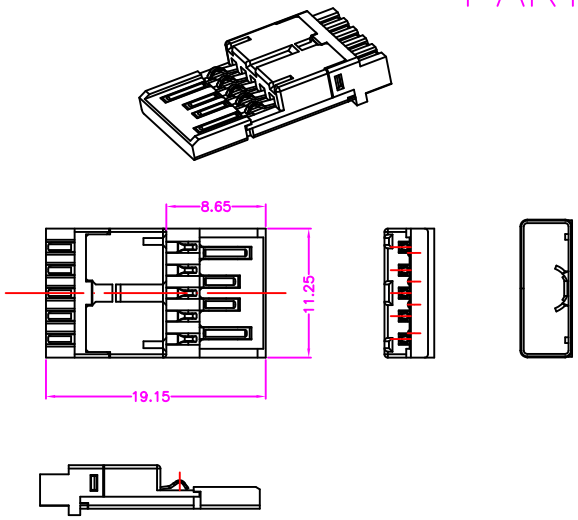

HOUSING

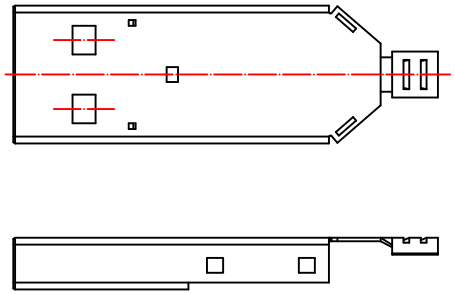

METAL SHIELD

PART NUMBER

22PE – 0 9 * T – 2 1 0 L

- SERIES: 22PE
- NO. OF POS.: 09
- CONTACT PLATED OPTION: *
  - 1: GOLD FLASH
  - 2: 5u" GOLD
  - 3: 10u" GOLD
  - 4: 15u" GOLD
  - 6: 30u" GOLD
- TIN PLATING ON SOLDER TAIL: T
- TRAY PACKAGE: 210
- LEAD FREE: L

MATERIALS

HOUSING: PBT (UL 94V–0)
SHELL: SPCC, NICKEL PLATING
REAR SHELL: SPCC, NICKEL PLATING
TERMINAL: COPPER ALLOY, GOLD PLATED ON CONTACT AREA
TIN PLATING ON SOLDER TAIL

SPECIFICATION

CURRENT RATING: 1.8 AMP MAX
DIELECTRIC WITHSTANDING: 500V AC FOR ONE MINUTE
CONTACT RESISTANCE: 30m OHMS MAX
INSULATION RESISTANCE: 1000M OHMS MIN AT DC 500V
OPERATION TEMPERATURE: –30°C~+85°C

REV.	DESCRIPTION	DATE
A	RELEASE	2009.4.10

淮洋有限公司
HUAI YANG CO., LTD.

LINEAR: .X±0.30 .XX±0.20 .XXX±0.10
ANGLES: ±3°

APPROVALS
DRAWN: Mars
CHECKED: Lion
APPROVED: James

10115

SERIES: USB CONNECTOR SERIES

TITLE: USB 3.0 A TYPE, SOLDER WIRE, METAL SHIELD, MALE

SIZE:	VERSION:	DWG NO.	
A4	A	22PE–001	
SCALE: NONE	UNIT: mm	SHEET: 1 OF 1	