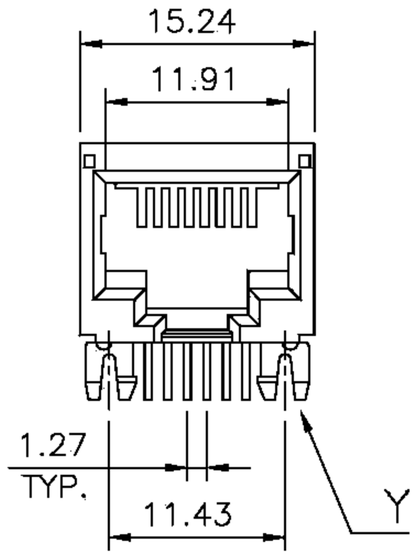

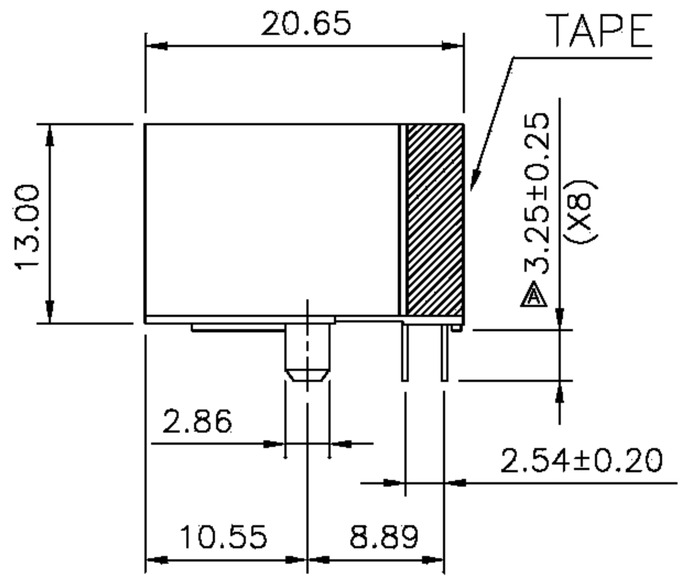

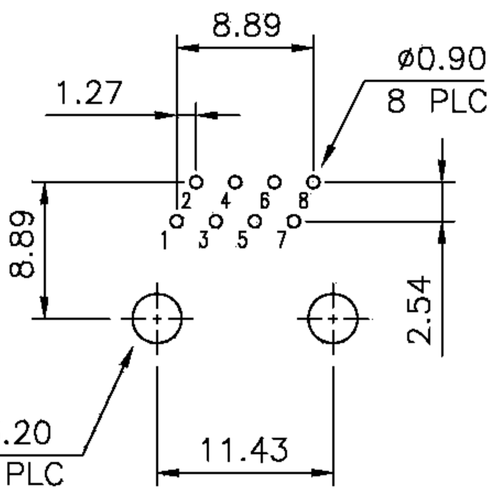

PCB LAYOUT

Ref.

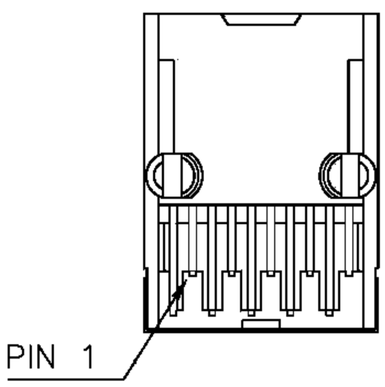

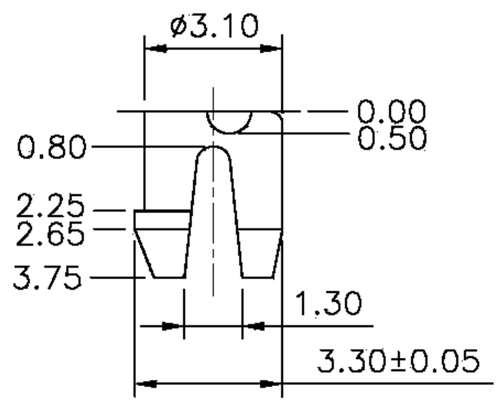

DETAIL Y

DO NOT SCALE DRAWING	TOLERANCES UNLESS OTHERWISE NOTED	INCH	MM	DR. *M.L.HUANG*	DATE MAY-29 '04	淮洋有限公司 HUAI YANG CO.,LTD. TEL : 886-2-8261-8986 FAX : 886-2-8261-1885 www.hy1688.com.tw 236新北市土城區中央路二段191號10樓之5
THIRD ANGLE PROJECTION	LINEAR MM / INCH	00 ± 000 ± 0000 ±	0.0 ± 0.25 0.00 ± 0.20 0.000 ± 0.10	CK'D *M.CHANG*	MAY-29 '04	TITLE SINGLE PORT, RJ45, SHIELDLESS, FLAT PIN, WITH TRANSFORMER, SIDE ENTRY PCB JACK
MM INCH	ANGLE ± 0° 30'	RADII	± 0.40 − 0.15	APP'D *W.J.YANG*	MAY-29 '04	SCALE SIZE DWG.NO. 981001 REV. 2 SHEET 1