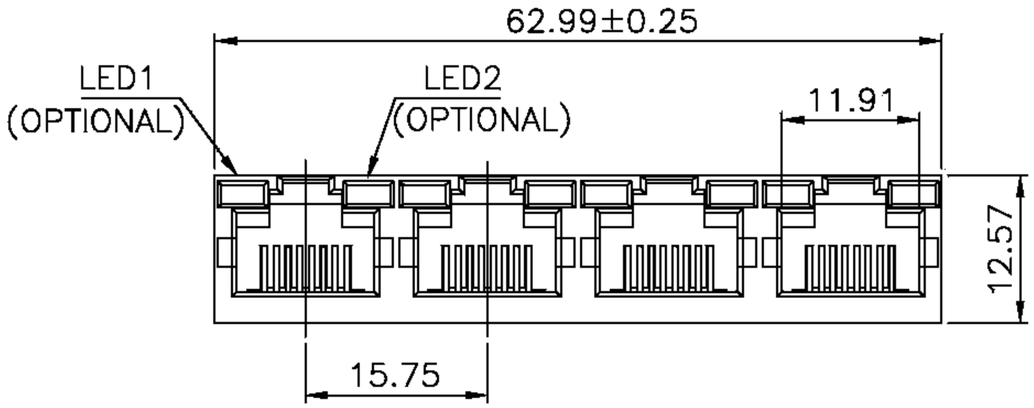

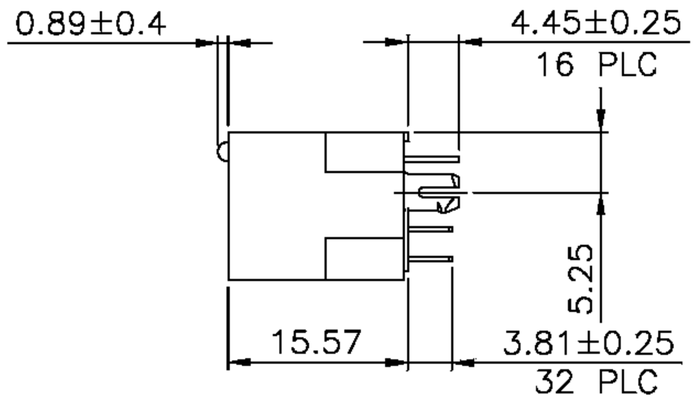

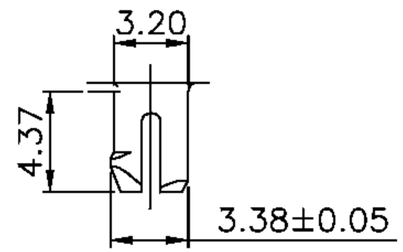

DETAIL Y

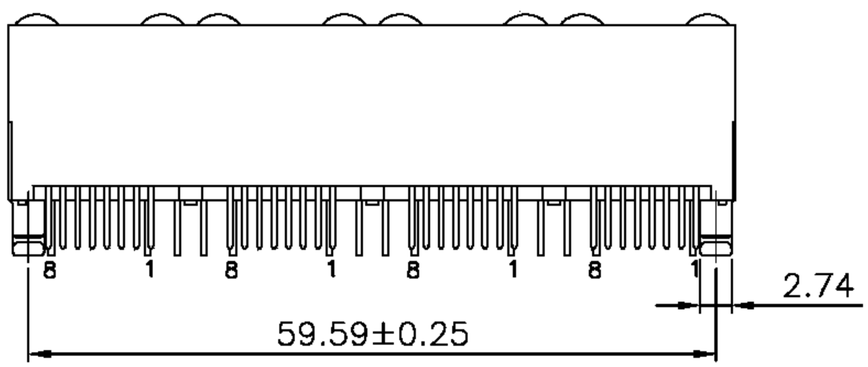

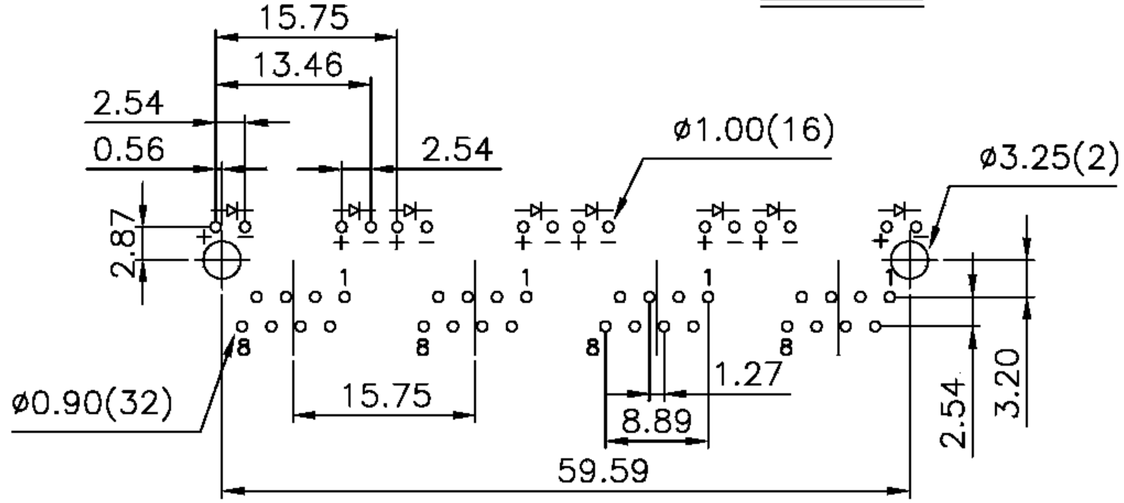

PCB LAYOUT

Ref.

DO NOT SCALE DRAWING	TOLERANCES UNLESS OTHERWISE NOTED	INCH	MM	DR. *H.W.CHAN*	DATE OCT-31 '07	淮洋有限公司 HUAI YANG CO.,LTD. TEL : 886-2-8261-8986 FAX : 886-2-8261-1885 www.hy1688.com.tw 236新北市土城區中央路二段191號10樓之5
THIRD ANGLE PROJECTION	LINEAR MM / INCH	00 ± 000 ± 0000 ±	0.0 ± 0.25 0.00 ± 0.20 0.000 ± 0.10	CK'D *M.CHANG*	OCT-31 '07	TITLE RJ45, 1X4 PORTS, WITH LED'S, TOP ENTRY PCB JACK
MM INCH	ANGLE ±0° 30'	RADII	+0.40 −0.15	APP'D *W.J.YANG*	NOV-01 '07	SCALE SIZE DWG.NO. 977401 REV. 4 SHEET 1