RoHS Compliance

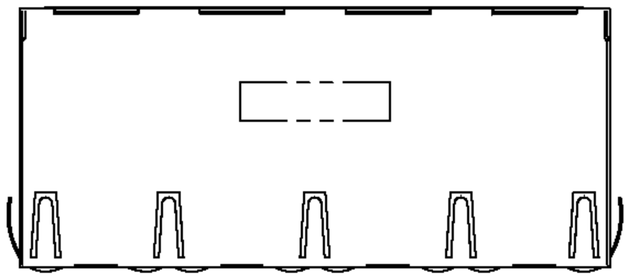

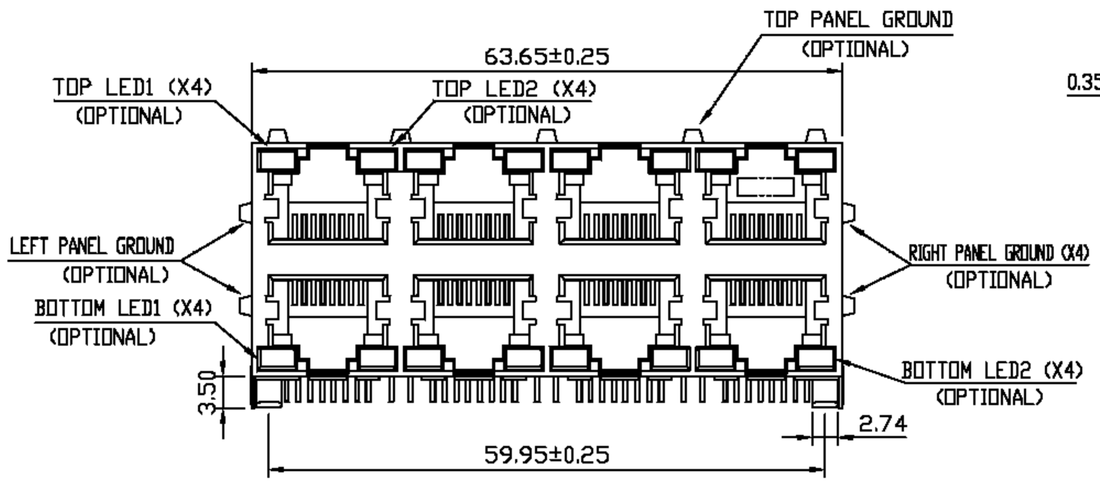

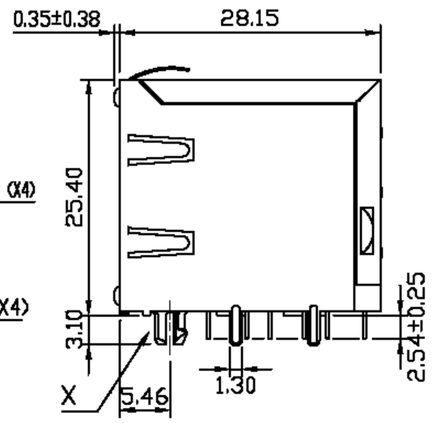

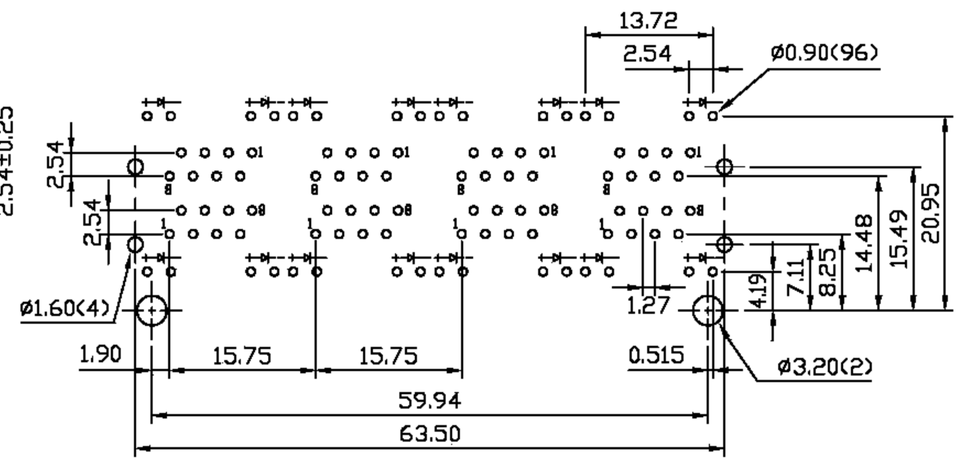

PCB LAYOUT
Ref.

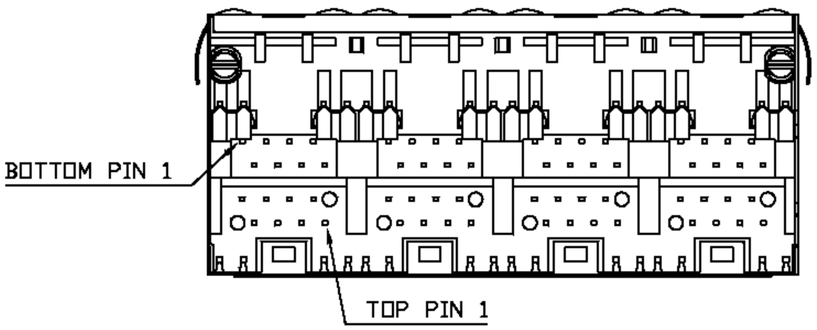

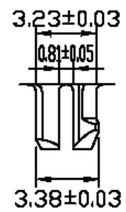

DETAIL X

DO NOT SCALE DRAWING	TOLERANCES UNLESS OTHERWISE NOTED	INCH	MM	DR. M.L.HUANG	DATE FEB-16 '05	淮洋有限公司 HUAI YANG CO.,LTD. TEL : 886-2-8261-8986 FAX : 886-2-8261-1885 www.hy1688.com.tw 236新北市土城區中央路二段191號10樓之5
THIRD ANGLE PROJECTION	LINEAR MM / INCH	00 ± .01 000 ± .005 0000 ± .002	0.0 ± 0.25 0.00 ± 0.13 0.000 ± 0.05	CK'D M.CHANG	FEB-16 '05	TITLE 2X4 STACKABLE MODULAR JACK RJ45, WITH LED'S AND SHIELD
MM INCH	ANGLE ± 0° 30'	RADII	+ 0.40 − 0.15	APP'D W.J.YANG	FEB-17 '05	SCALE SIZE DWG.NO. 976604 REV. 5 SHEET 1