RoHS Compliance

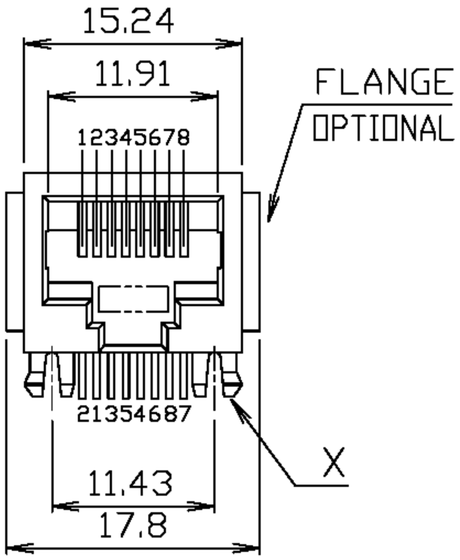

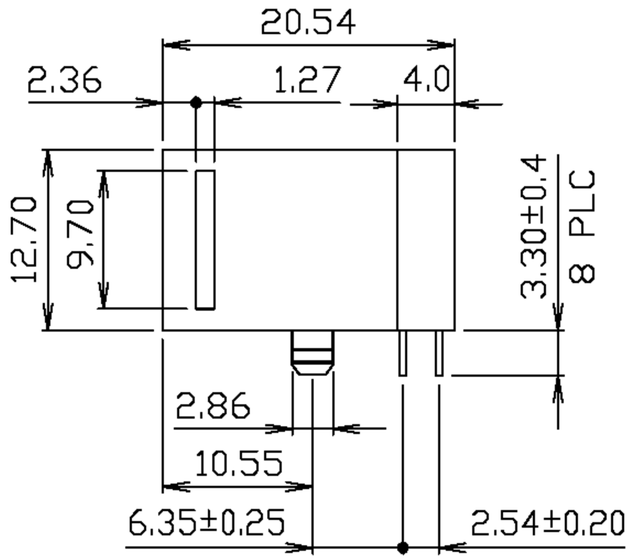

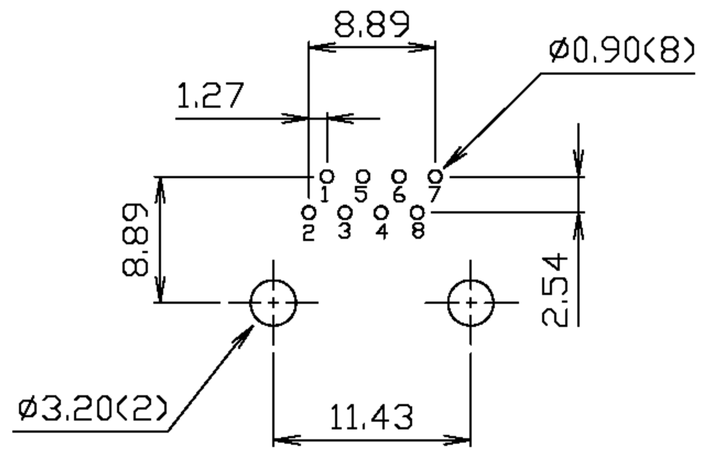

PC Board Layout
Ref.

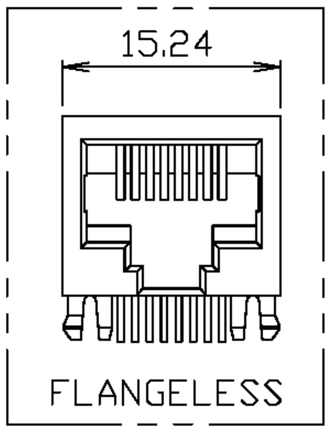

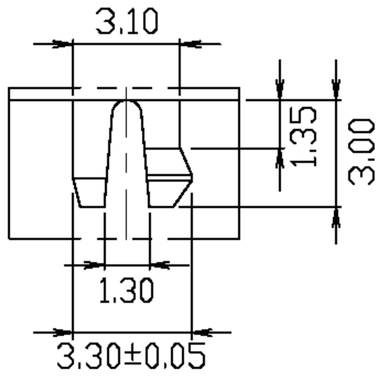

DETAIL X

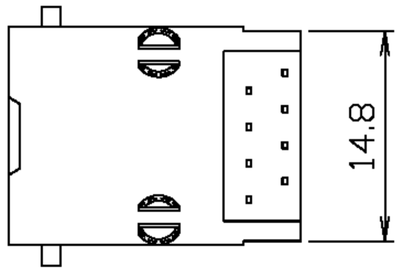

淮洋有限公司 HUAI YANG CO.,LTD.
TEL : 886-2-8261-8986 FAX : 886-2-8261-1885
www.hy1688.com.tw 236新北市土城區中央路二段191號10樓之5

DO NOT SCALE DRAWING	TOLERANCES UNLESS OTHERWISE NOTED	INCH	MM	DR. *M.L.HUANG*	DATE SEP-23 '08	TITLE RJ45, SHIELDLESS SIDE ENTRY PCB JACK		
THIRD ANGLE PROJECTION	LINEAR MM / INCH	00 ± .01 000 ± .005 0000 ± .002	0.0 ± 0.25 0.00 ± 0.13 0.000 ± 0.05	CK'D *M.CHANG*	SEP-23 '08			
MM INCH	ANGLE ± 0° 30'	RADII	+ 0.40 − 0.15	APP'D *W.J.YANG*	SEP-23 '08	SCALE SIZE DWG.NO. 975002	REV. 7	SHEET 1