RoHS Compliance

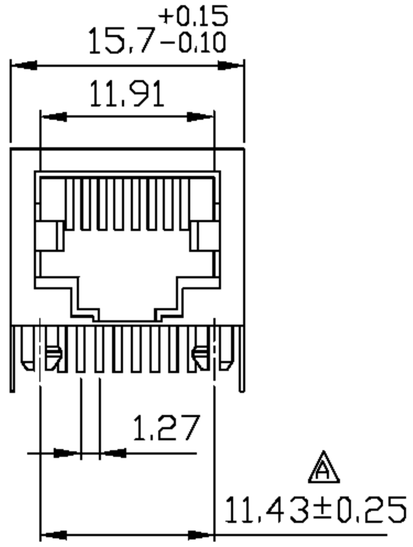

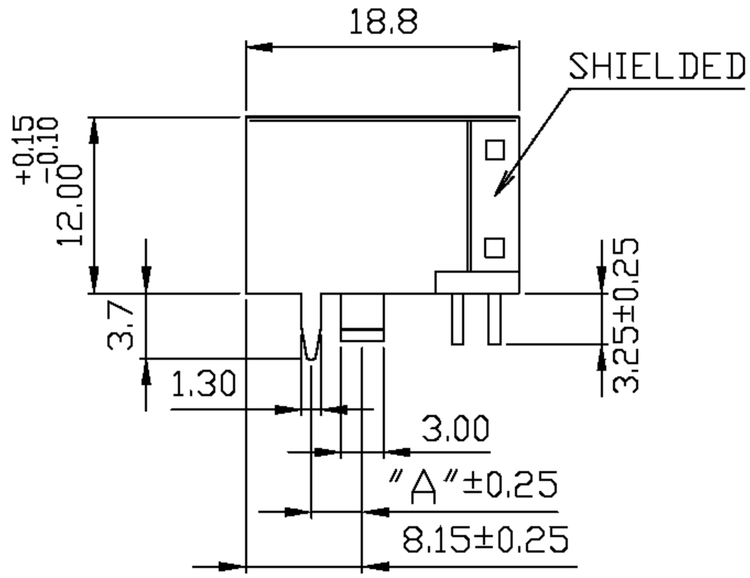

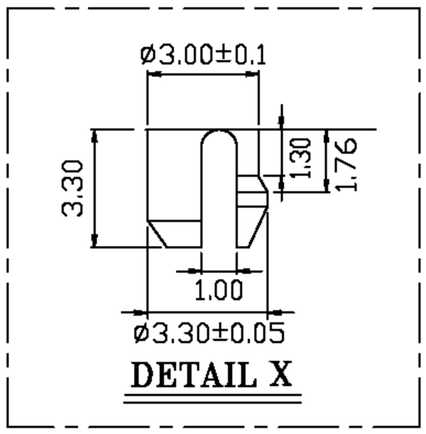

REVISIONS			
LTR	DESCRIPTION	DATE	APP
A	CAR 11.43	01/22/'09	CHANG

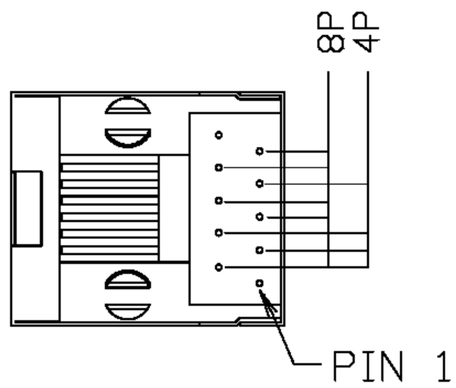

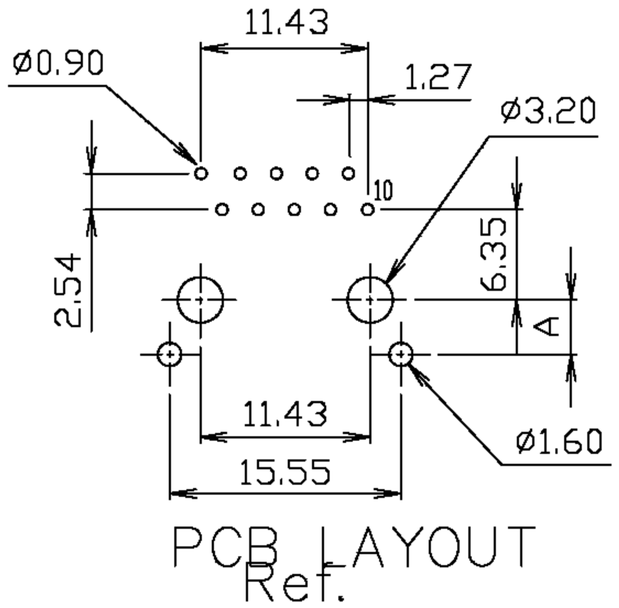

DO NOT SCALE DRAWING	TOLERANCES UNLESS OTHERWISE NOTED	INCH	MM	DR. CIAN.CI.LUO	DATE FEB-24 '09	淮洋有限公司 HUAI YANG CO.,LTD. TEL : 886-2-8261-8986 FAX : 886-2-8261-1885 www.hy1688.com.tw 236新北市土城區中央路二段191號10樓之5
THIRD ANGLE PROJECTION	LINEAR MM / INCH	00 ± .01 000 ± .005 0000 ± .002	0.0 ±0.25 0.00 ±0.13 0.000 ±0.05	CK'D M.CHANG	FEB-24 '09	TITLE 10 & 8POSITION SIDE ENTRY VERY LOW PROFILE, SHIELDED PCB JACK
MM INCH	ANGLE ± 0° 30'	RADII	+ 0.40 − 0.15	APP'D W.J.YANG	FEB-24 '09	SCALE SIZE DWG.NO. 974401 REV. 5 SHEET 1