RoHS Compliance

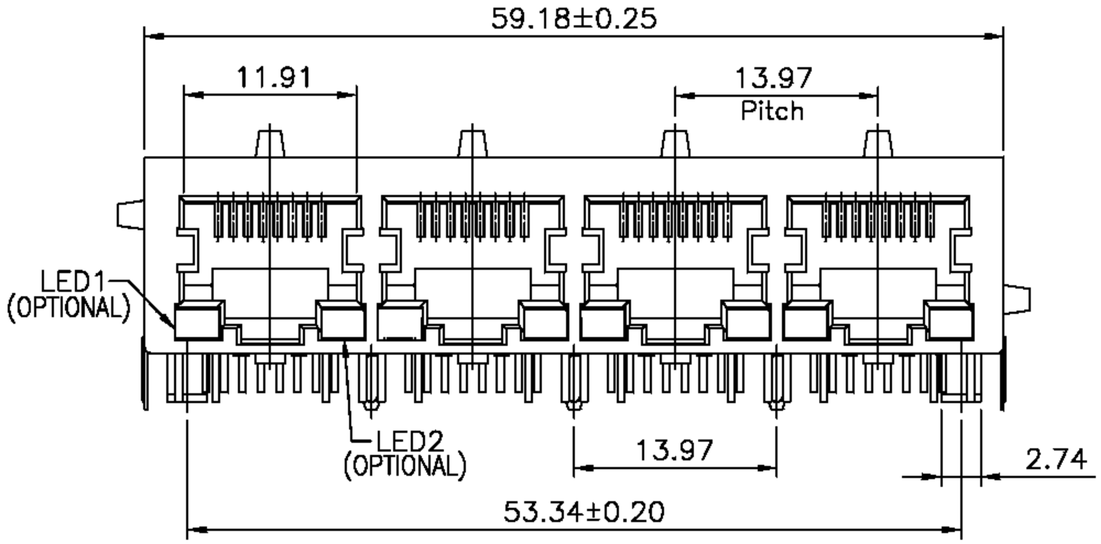

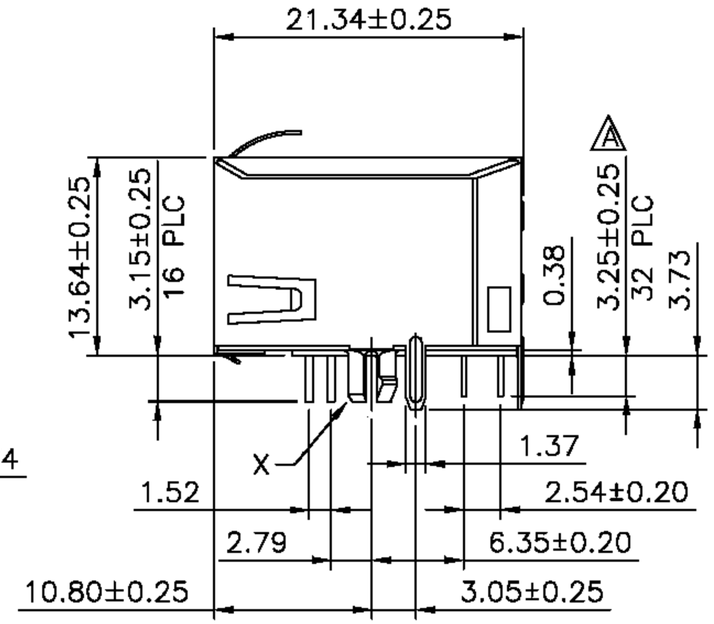

REVISIONS			
LTR	DESCRIPTION	DATE	APP
	CAR 2.80±0.25	01/17/'08	CHANG

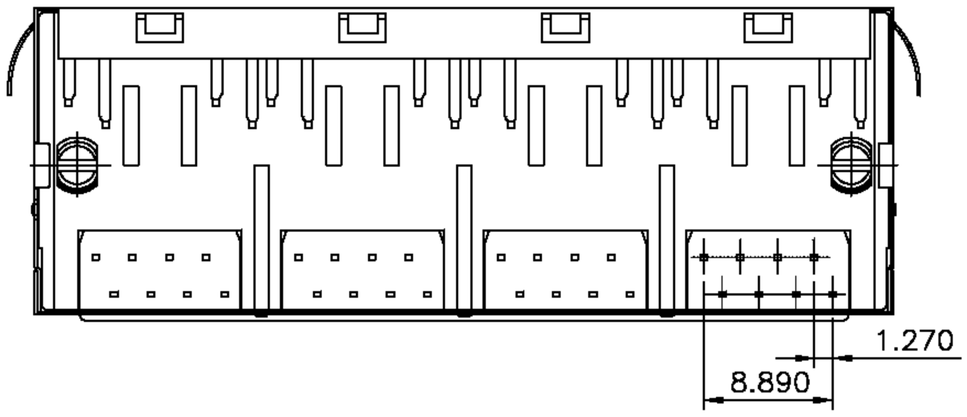

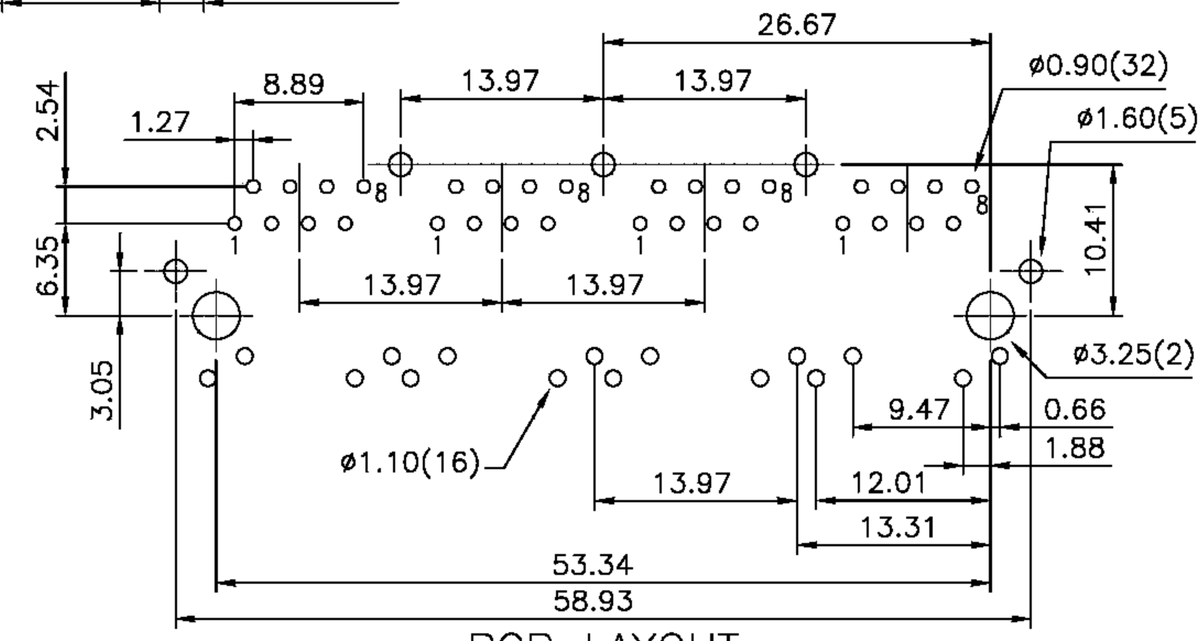

PCB LAYOUT
Ref.

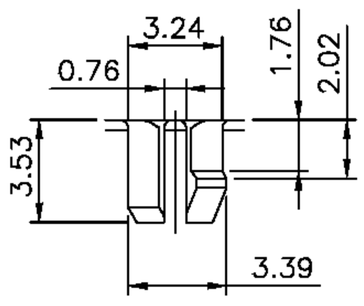

DETAIL X

DO NOT SCALE DRAWING	TOLERANCES UNLESS OTHERWISE NOTED	INCH	MM	DR. CIAN.CI.LUO	DATE JAN-17 '08	淮洋有限公司 HUAI YANG CO.,LTD. TEL : 886-2-8261-8986 FAX : 886-2-8261-1885 www.hy1688.com.tw 236新北市土城區中央路二段191號10樓之5
THIRD ANGLE PROJECTION	LINEAR MM / INCH	00 ± .01 000 ± .005 0000 ± .002	0.0 ± 0.25 0.00 ± 0.20 0.000 ± 0.05	CK'D M.CHANG	JAN-17 '08	TITLE MODULAR JACK, 1X4, RJ45, WITH LED'S, FLAT PIN, SIDE ENTRY
MM INCH	ANGLE ± 0° 30'	RADII	± 0.40 − 0.15	APP'D W.J.YANG	JAN-18 '08	SCALE SIZE DWG.NO. 974213 REV. 2 SHEET 1