RoHS Compliance

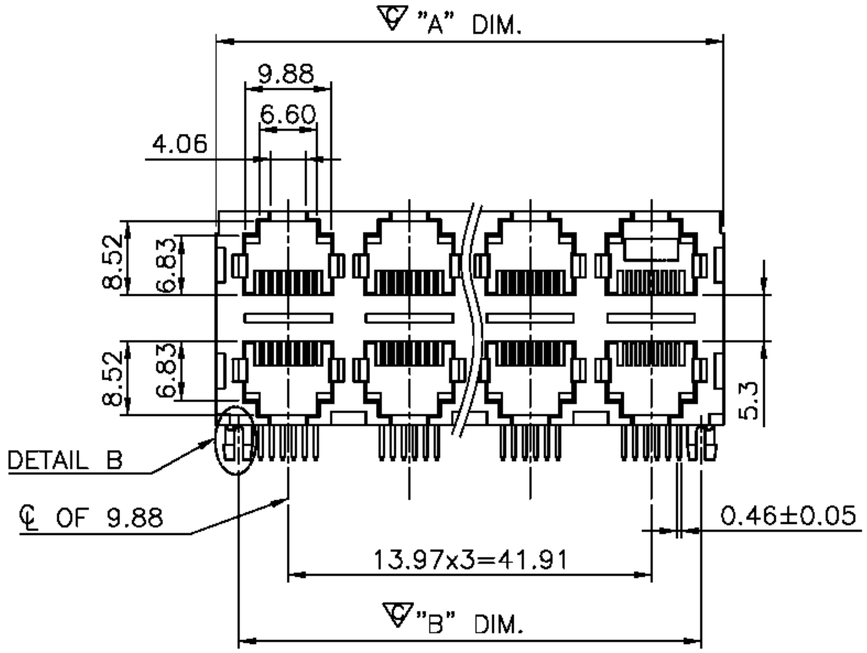

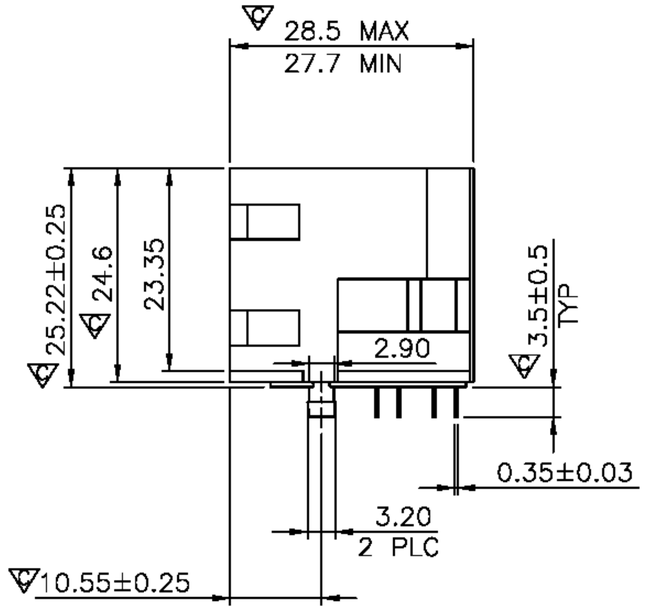

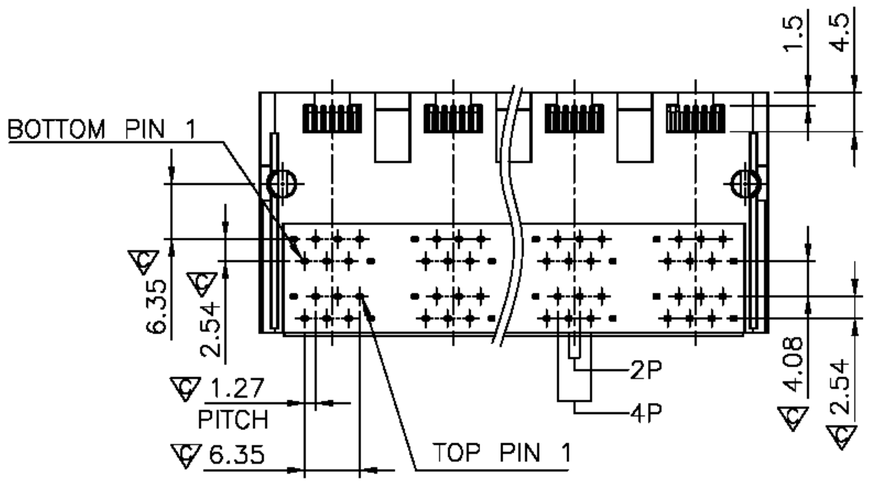

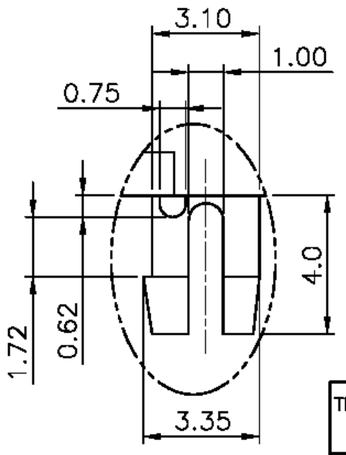

DETAIL B
SCALE 4:1

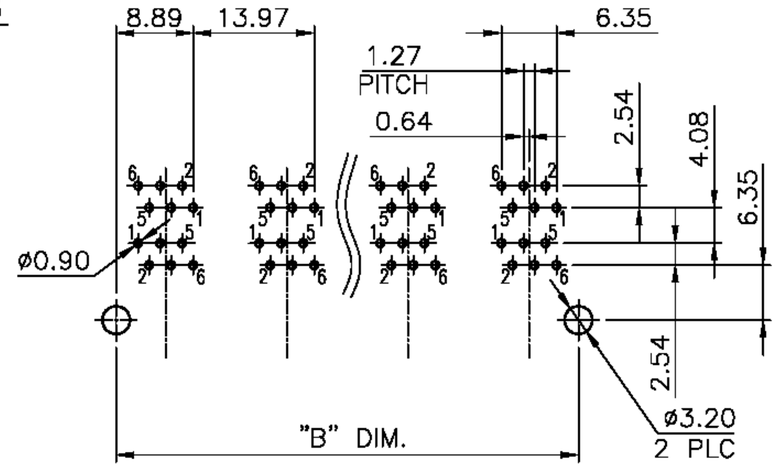

RECOMMENDED PCB LAYOUT
RECOMMENDED PCB THICKNESS: 1.6mm
TOLERANCE: ±0.05 (TOP VIEW)

LTR	DESCRIPTION	DATE	APVD

REVISIONS

THIS DRAWING IS A CONTROLLED DOCUMENT.
DO NOT SCALE DRAWING.

DIMENSIONS: MM	TOLERANCES UNLESS OTHERWISE SPECIFIED:
THIRD ANGLE PROJECTION	0 PLC ± – 1 PLC ±0.25 2 PLC ±0.13 3 PLC ±0.05 ANGLES ± –
MATERIAL SEE NOTES	FINISH SEE NOTES
DWN A.HUANG	DATE AUG–24–2010
CHK M.CHANG	AUG–24–2010
APVD W.J.YANG	AUG–25–2010

淮洋有限公司 HUAI YANG CO.,LTD.
TEL : 886-2-8261-8986 FAX : 886-2-8261-1885
www.hy1688.com.tw 236新北市土城區中央路二段191號10樓之5

TITLE
2X2 TO 2X8 (4PORTS TO 8PORTS), 6POSITION, RIGHT ANGLE PCB JACK

SIZE	CAUGE CODE	DRAWING NO	
A4	–	973301	
WEIGHT – GRAMS Ref.		REV 9	SHEET 1