RoHS Compliance

REVISIONS			
LTR	DESCRIPTION	DATE	APP
A	CAR 1.8	12/15/'09	

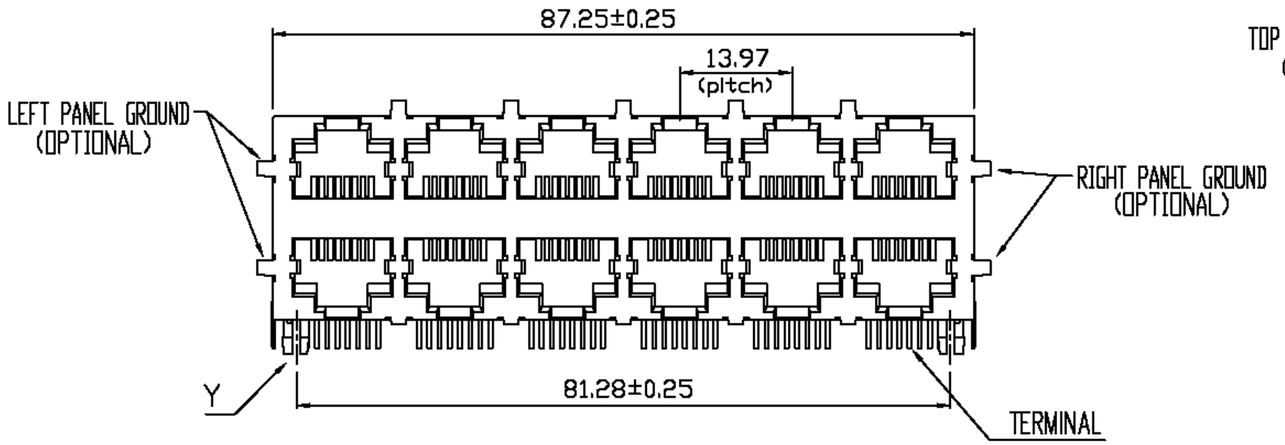

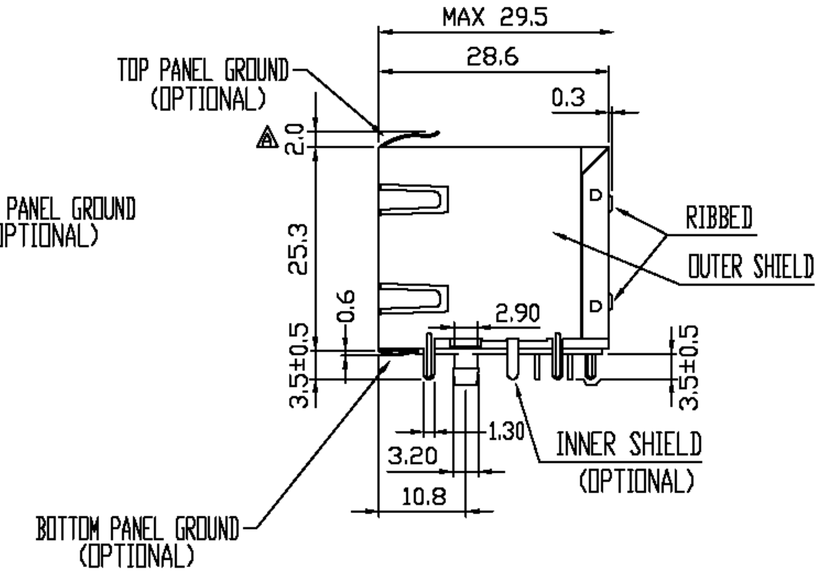

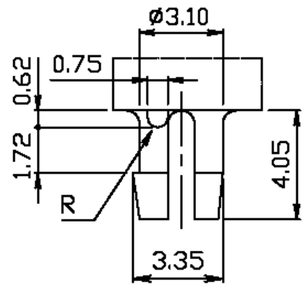

DETAIL Y

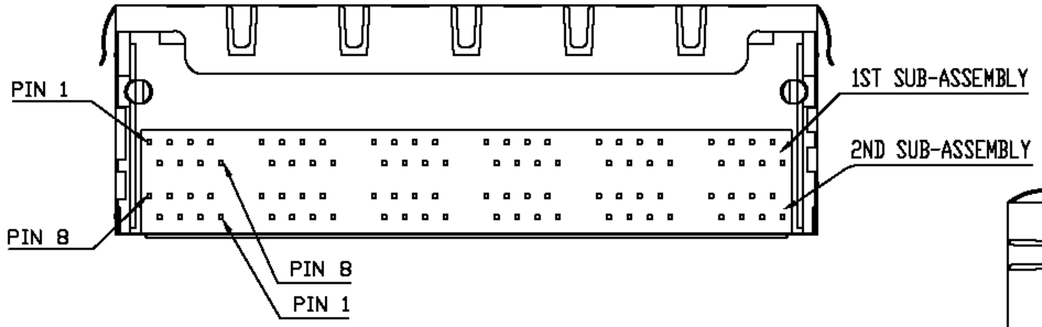

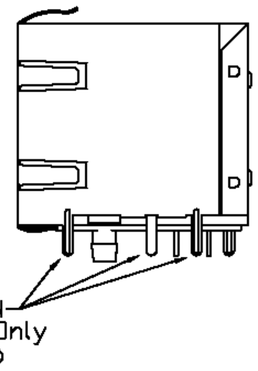

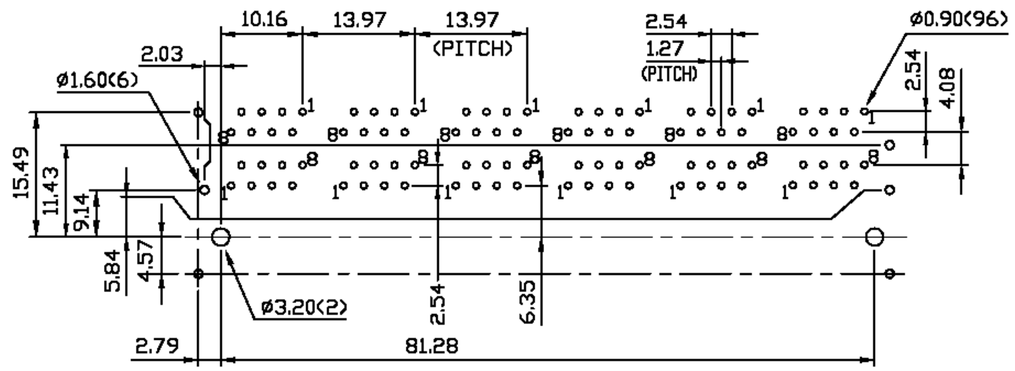

PCB LAYOUT
Ref.

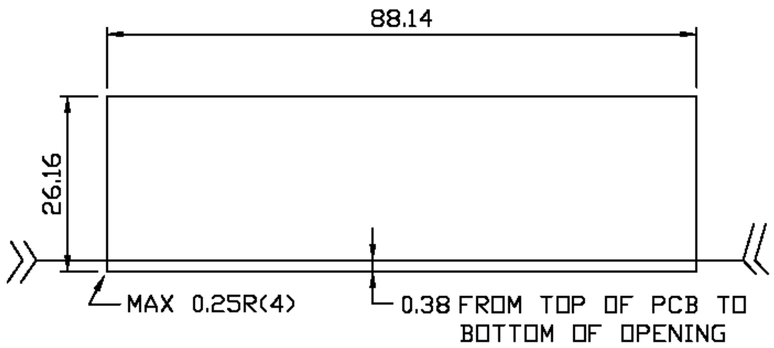

SUGGESTED PANEL CUTOUT

DO NOT SCALE DRAWING	TOLERANCES UNLESS OTHERWISE NOTED	INCH	MM	DR. CIAN.CI.LUO	DATE DEC-15 '09
THIRD ANGLE PROJECTION	LINEAR MM / INCH	00 ± .01 000 ± .005 0000 ± .002	0.0 ± 0.25 0.00 ± 0.13 0.000 ± 0.05	CK'D M.CHANG	DEC-15 '09
MM INCH	ANGLE ± 0° 30′	RADII	+ 0.40 − 0.15	APP'D W.J.YANG	DEC-16 '09

淮洋有限公司 HUAI YANG CO.,LTD.
TEL : 886-2-8261-8986 FAX : 886-2-8261-1885
www.hy1688.com.tw 236新北市土城區中央路二段191號10樓之5

TITLE 2X6 8POSITIONS RIGHT ANGLE SHIELDED PCB JACK

SCALE	SIZE	DWG.NO.	REV.	SHEET
		973201	5	1