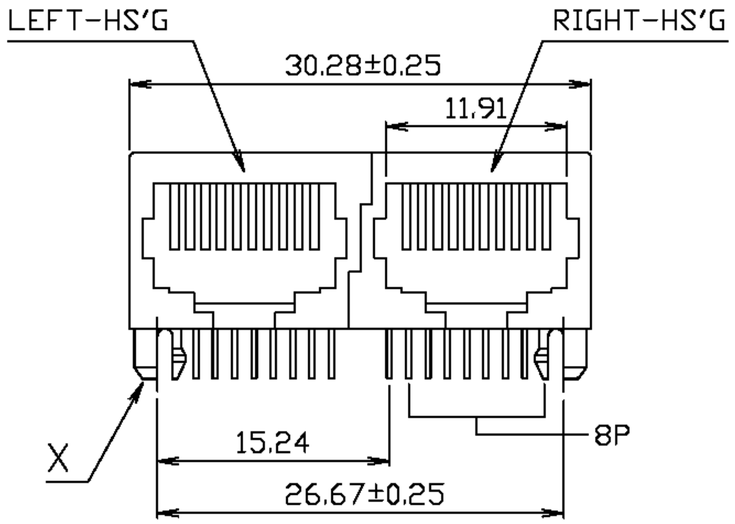

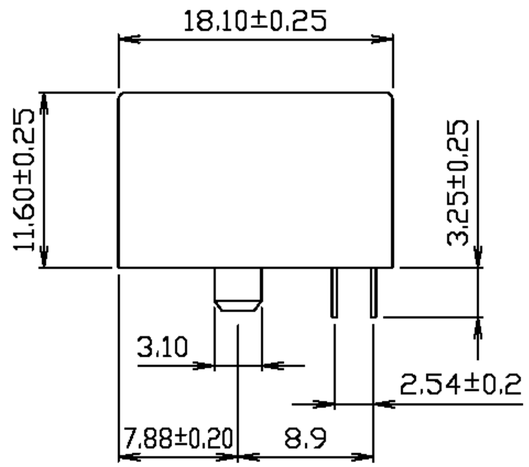

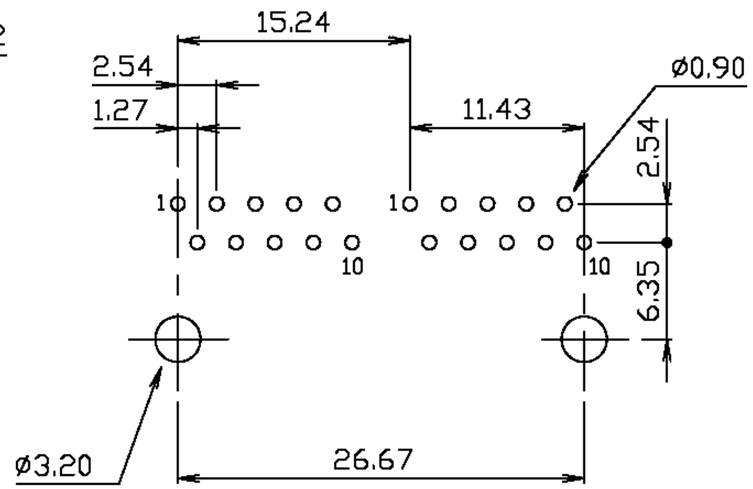

PC Board Layout
Ref.

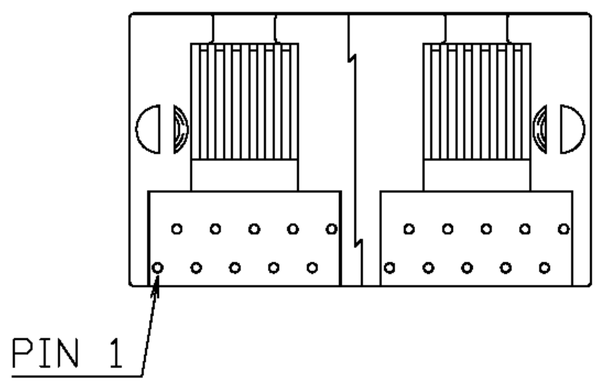

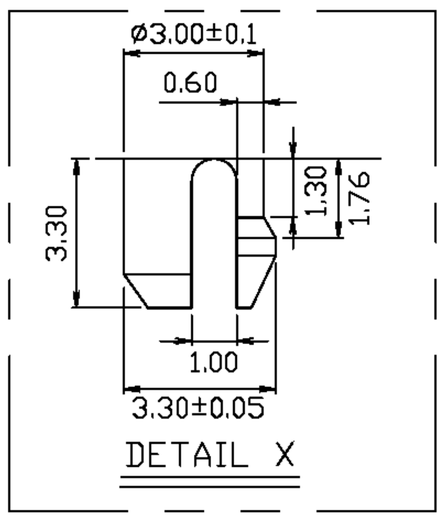

DO NOT SCALE DRAWING	TOLERANCES UNLESS OTHERWISE NOTED	INCH	MM	DR. M.L.HUANG	DATE JUN-01 '06	淮洋有限公司 HUAI YANG CO.,LTD. TEL : 886-2-8261-8986 FAX : 886-2-8261-1885 www.hy1688.com.tw 236新北市土城區中央路二段191號10樓之5
THIRD ANGLE PROJECTION	LINEAR MM / INCH	00 ± .01 000 ± .005 0000 ± .002	0.0 ± 0.25 0.00 ± 0.13 0.000 ± 0.05	CK'D M.CHANG	JUN-01 '06	TITLE 2 PORT, 10 POSITION, SIDE ENTRY, LOW PROFILE, FLAT PIN, WITHOUT SHIELD
MM INCH	ANGLE ± 0° 30'	RADII	± 0.40 / − 0.15	APP'D W.J.YANG	JUN-02 '06	SCALE SIZE DWG.NO. 972502 REV. 1 SHEET 1