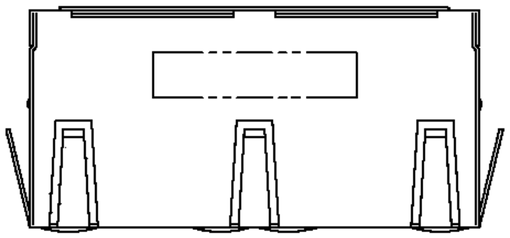

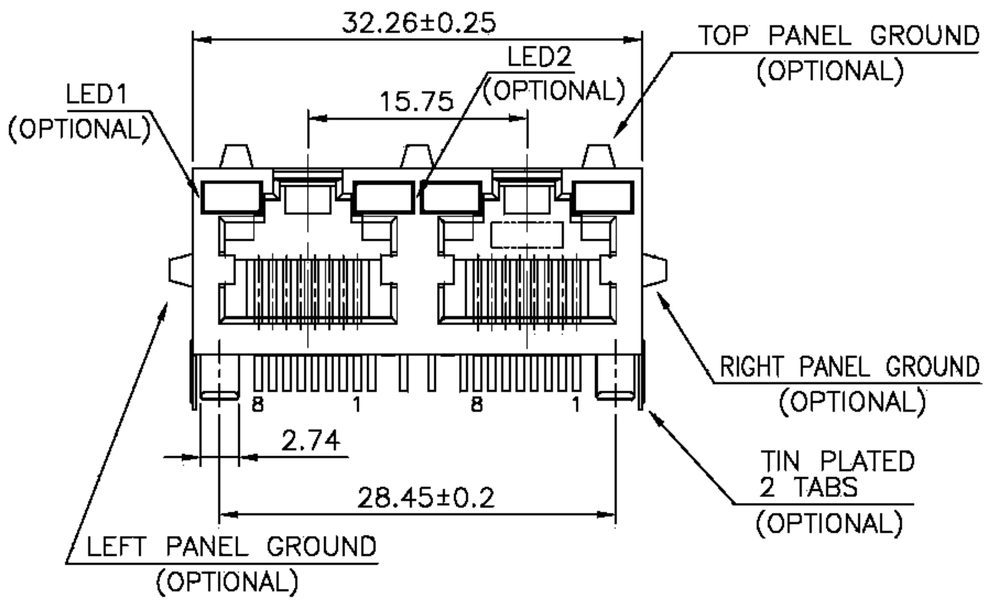

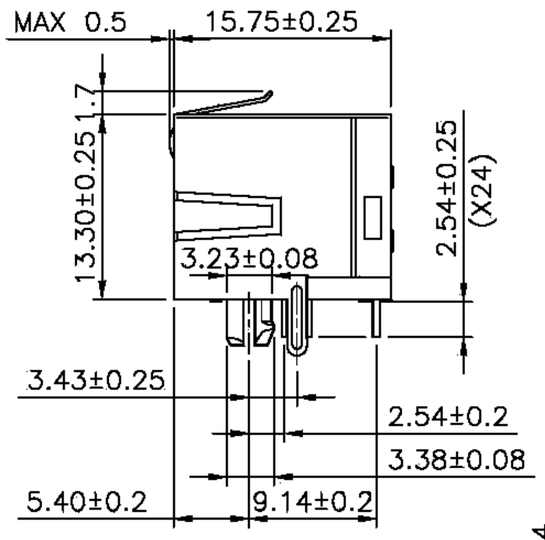

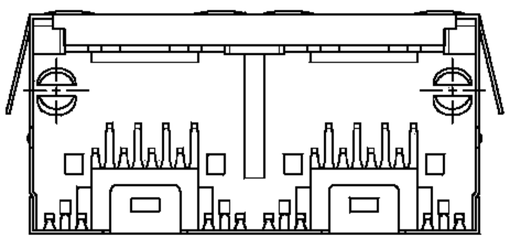

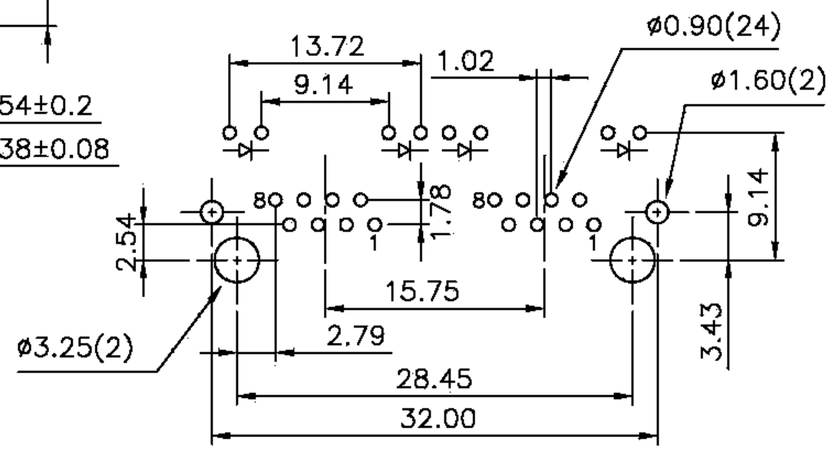

PCB LAYOUT (Ref.)

DO NOT SCALE DRAWING	TOLERANCES UNLESS OTHERWISE NOTED	INCH	MM	DR. *M.L.HUANG*	DATE JAN-09 '06	淮洋有限公司 HUAI YANG CO.,LTD. TEL : 886-2-8261-8986 FAX : 886-2-8261-1885 www.hy1688.com.tw 236新北市土城區中央路二段191號10樓之5
THIRD ANGLE PROJECTION	LINEAR MM / INCH	00±.01 000±.005 0000±.002	0.0±0.25 0.00±0.13 0.000±0.05	CK'D *M.CHANG*	JAN-09 '06	TITLE 2PORTS, 8POSITION, WITH LED'S SHIELDED, SIDE ENTRY PCB GANGED JACK
MM INCH	ANGLE ±0° 30'	RADII	+0.40 −0.15	APP'D *W.J.YANG*	JAN-10 '06	SCALE SIZE DWG.NO. 971422 REV. 3 SHEET 1