RoHS Compliance

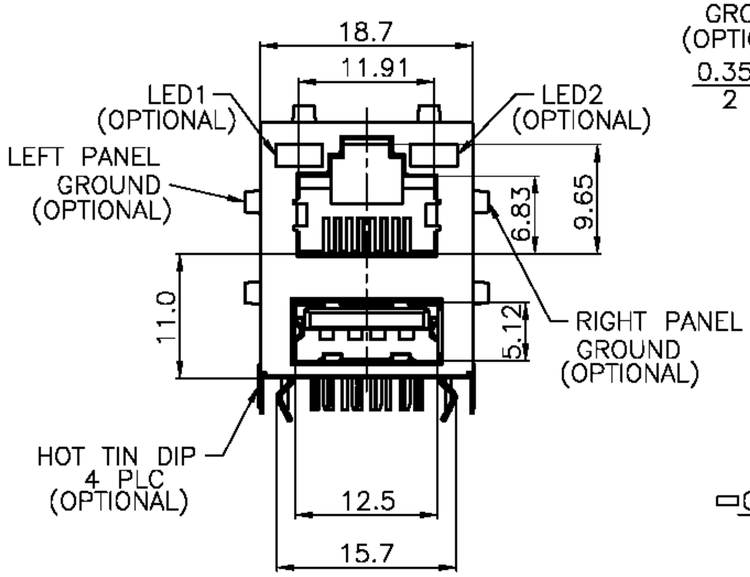

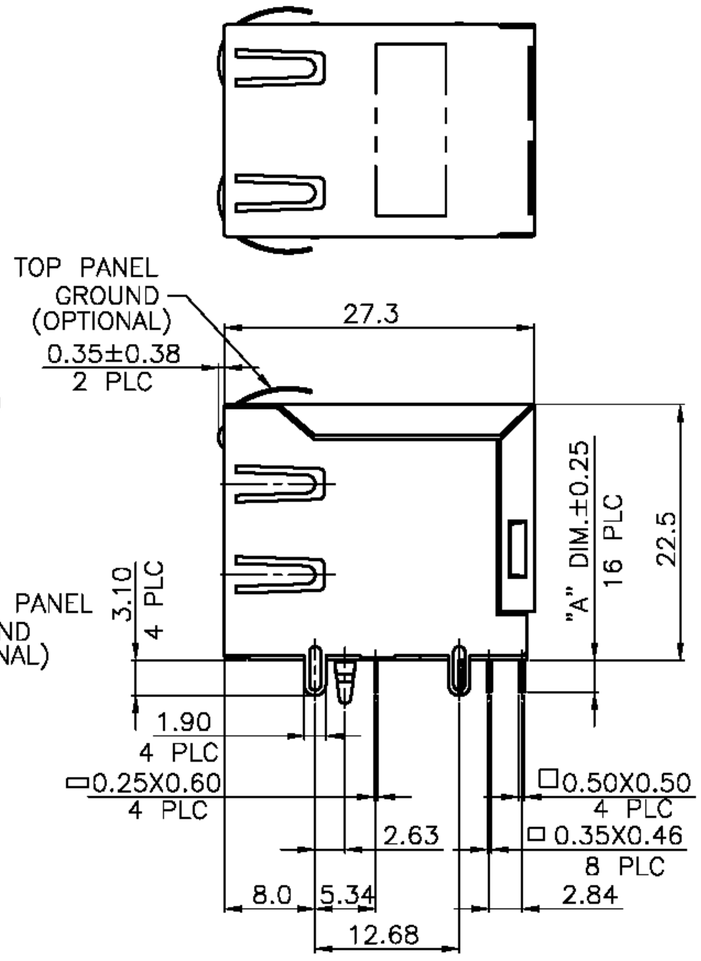

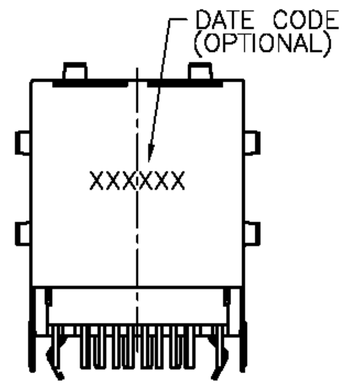

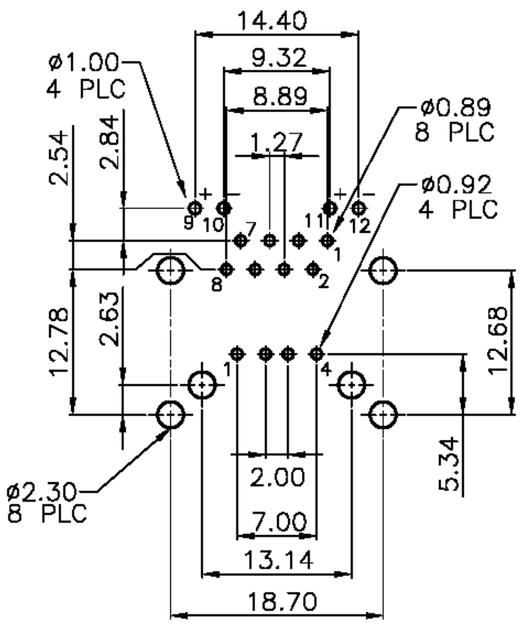

PCB LAYOUT

Ref.

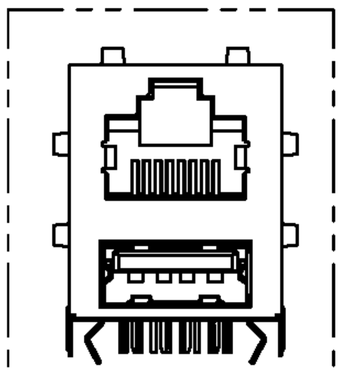

NO LED SERIES

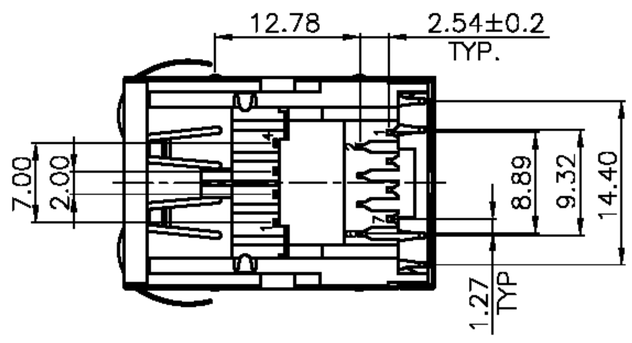

DO NOT SCALE DRAWING	TOLERANCES UNLESS OTHERWISE NOTED	INCH	MM	DR. *CIAN.CI.LUO*	DATE MAY–26 '09	淮洋有限公司 HUAI YANG CO.,LTD. TEL : 886-2-8261-8986 FAX : 886-2-8261-1885 www.hy1688.com.tw 236新北市土城區中央路二段191號10樓之5
THIRD ANGLE PROJECTION	LINEAR MM / INCH	00± 000± 0000±	0.0±0.25 0.00±0.13 0.000±0.05	CK'D *M.CHANG*	MAY–26 '09	TITLE MODULAR JACK, RJ45 STACKED OVER USB CONN, WITHOUT LED, DIP TYPE
MM INCH	ANGLE ±0° 30'	RADII	+0.40 −0.15	APP'D *W.J.YANG*	MAY–27 '09	SCALE SIZE DWG.NO. 971108 REV. 5 SHEET 1