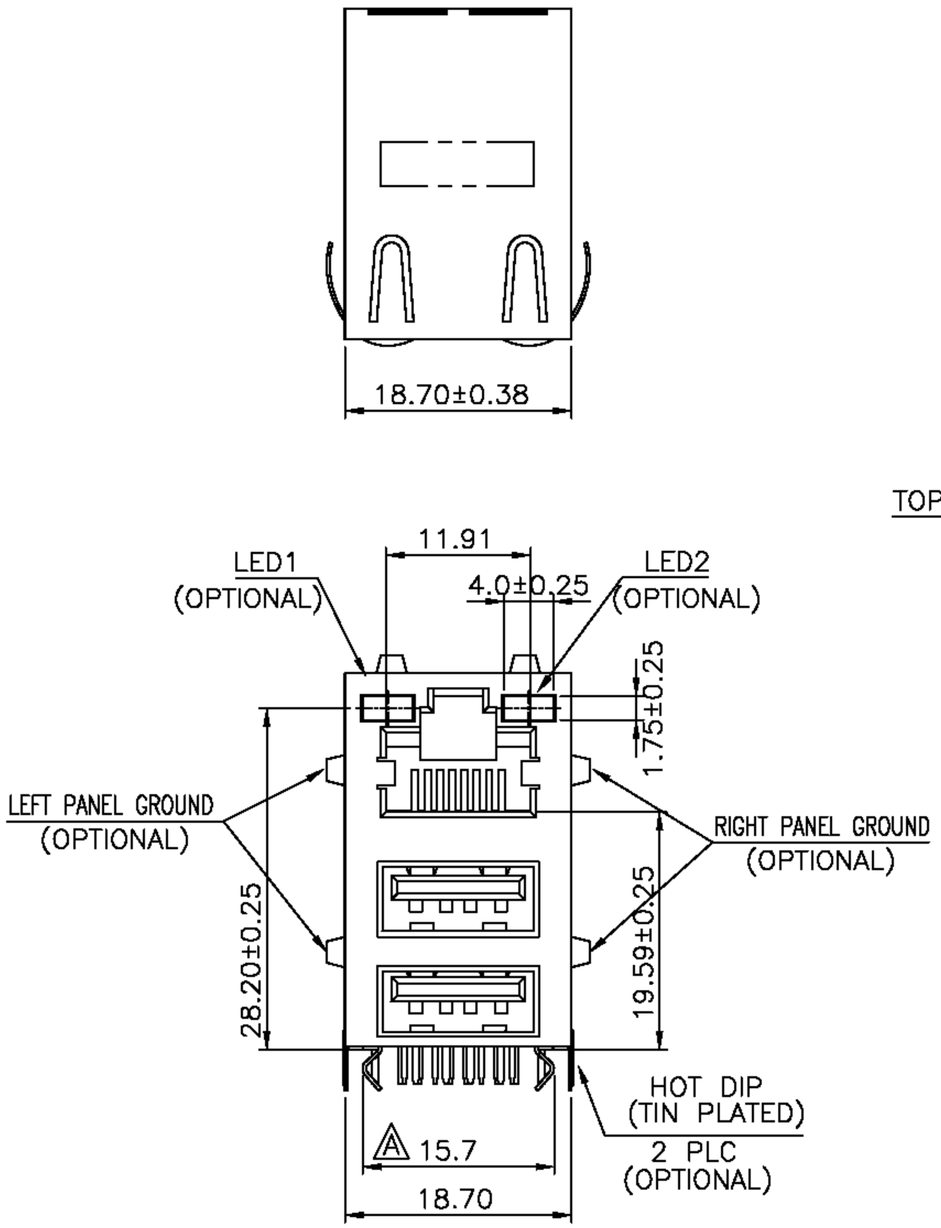

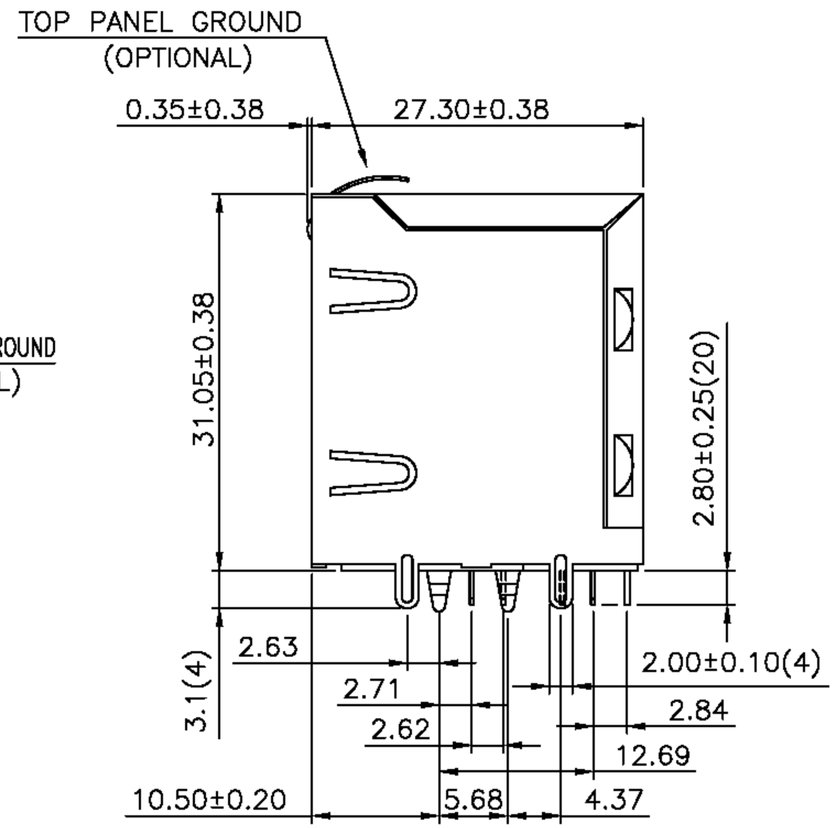

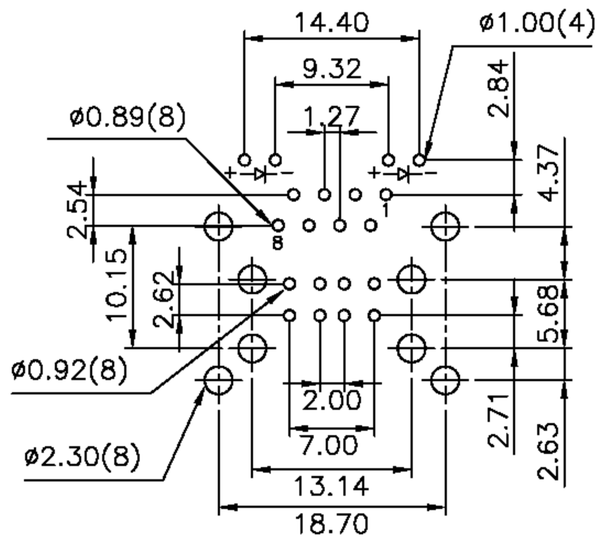

PCB LAYOUT

Ref.

DO NOT SCALE DRAWING	TOLERANCES UNLESS OTHERWISE NOTED	INCH	MM	DR. CIAN.CI.LUO	DATE NOV-12 '09	淮洋有限公司 HUAI YANG CO.,LTD. TEL : 886-2-8261-8986 FAX : 886-2-8261-1885 www.hy1688.com.tw 236新北市土城區中央路二段191號10樓之5
THIRD ANGLE PROJECTION	LINEAR MM / INCH	00 ± 000 ± 0000 ±	0.0 ± 0.25 0.00 ± 0.13 0.000 ± 0.05	CK'D M.CHANG	NOV-12 '09	TITLE 2X1PORT, RJ45+USB, SHIELD, WITH LED, WITHOUT TRANSFORMER, RECEPTACLE CONNECTOR
MM INCH	ANGLE ± 0° 30'	RADII	+ 0.40 − 0.15	APP'D W.J.YANG	NOV-13 '09	SCALE SIZE DWG.NO. 971101 REV. 4 SHEET 1