P=NUMBER OF PORTS

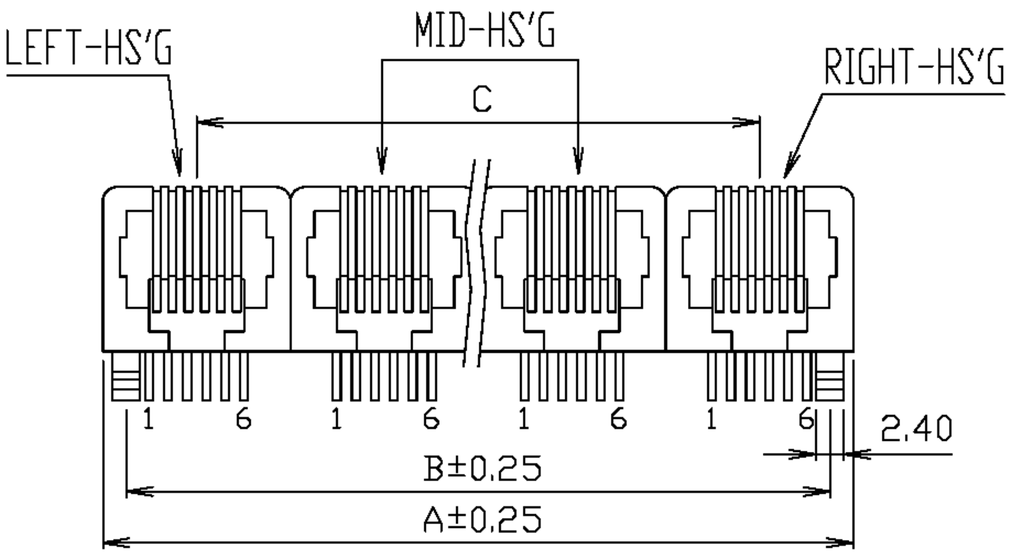

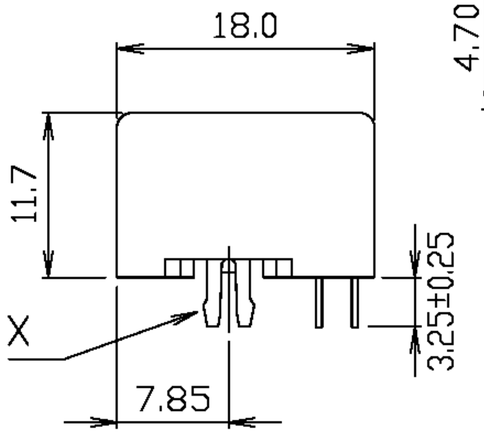

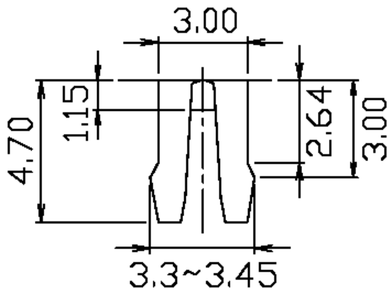

DETAIL X

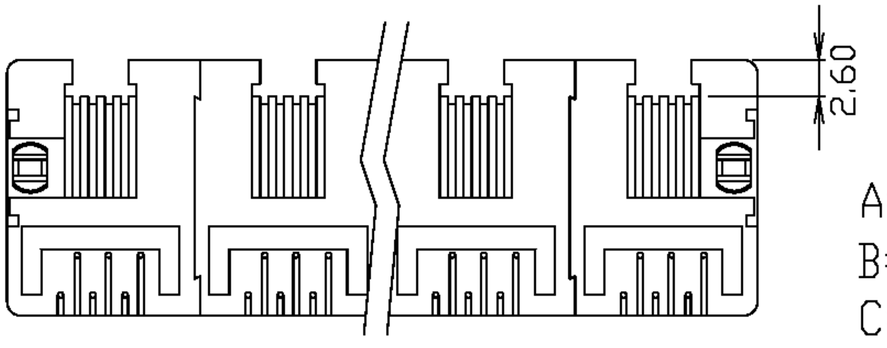

A=13.2(m/m)XP-0.50(m/m)X(P-1)
B=A-3.04(m/m)
C=12.7(m/m)X(P-1)

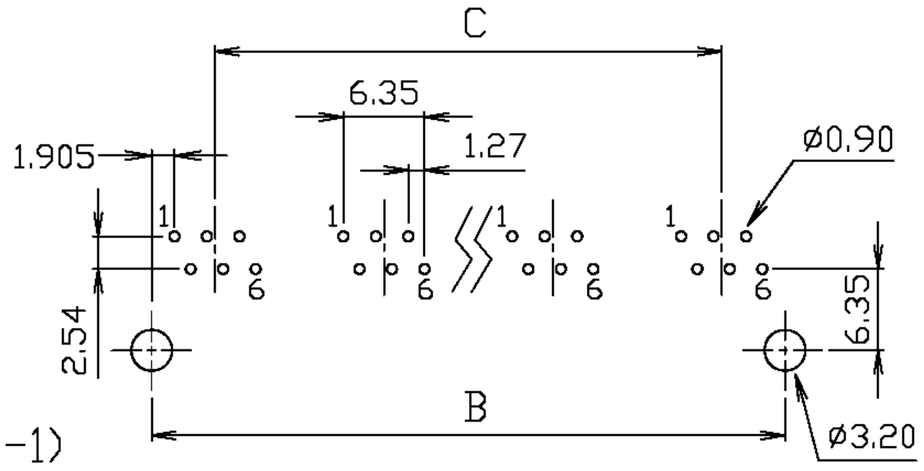

PCB Layout
Ref.

DO NOT SCALE DRAWING	TOLERANCES UNLESS OTHERWISE NOTED	INCH	MM	DR. *M.L.HUANG*	DATE NOV-02 '04	淮洋有限公司 HUAI YANG CO.,LTD. TEL : 886-2-8261-8986 FAX : 886-2-8261-1885 www.hy1688.com.tw 236新北市土城區中央路二段191號10樓之5
THIRD ANGLE PROJECTION	LINEAR MM / INCH	00 ± .01 000 ± .005 0000 ± .002	0.0 ± 0.25 0.00 ± 0.13 0.000 ± 0.05	CK'D *M.CHANG*	NOV-02 '04	TITLE RJ11, SIDE ENTRY VERY LOW PROFILE, GANGED JACK FROM 2PORTS UP.
MM INCH	ANGLE ± 0° 30'	RADII	+ 0.40 − 0.15	APP'D *W.J.YANG*	NOV-03 '04	SCALE SIZE DWG.NO. 969701 / REV. 3 / SHEET 1