RoHS Compliance

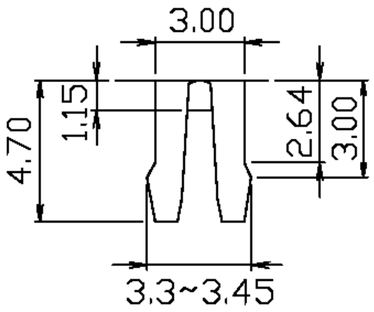

DETAIL X

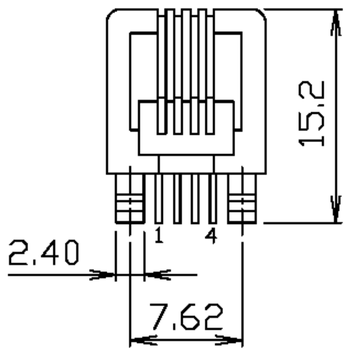

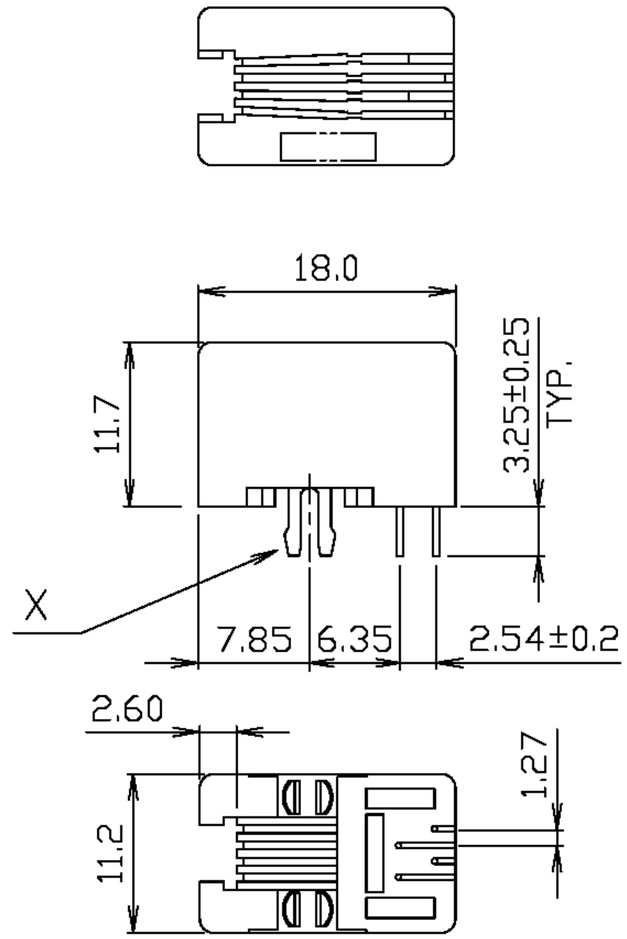

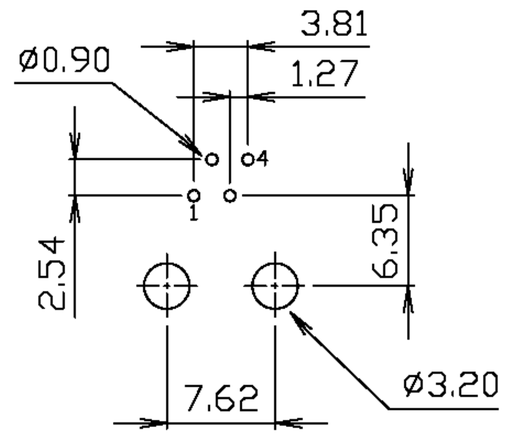

PC Board Layout
Ref.

DO NOT SCALE DRAWING	TOLERANCES UNLESS OTHERWISE NOTED	INCH	MM	DR. *CIAN.CI.LUO*	DATE APR-29 '10	淮洋有限公司 HUAI YANG CO.,LTD. TEL : 886-2-8261-8986 FAX : 886-2-8261-1885 www.hy1688.com.tw 236新北市土城區中央路二段191號10樓之5
THIRD ANGLE PROJECTION	LINEAR MM / INCH	00 ± .01 000 ± .005 0000 ± .002	0.0 ± 0.25 0.00 ± 0.13 0.000 ± 0.05	CK'D *M.CHANG*	APR-29 '10	TITLE 4POSITION, SIDE ENTRY, VERY LOW PROFILE, PCB JACK
MM INCH	ANGLE ± 0° 30'	RADII	+ 0.40 − 0.15	APP'D *W.J.YANG*	APR-30 '10	SCALE SIZE DWG.NO. 969401 / REV. 6 / SHEET 1