RoHS Compliance

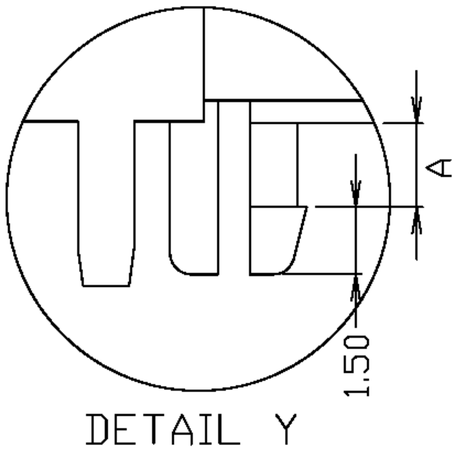

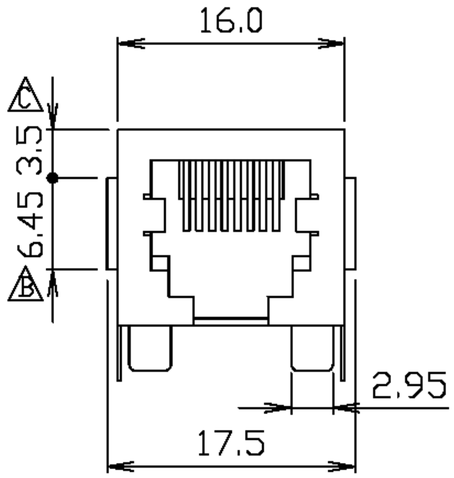

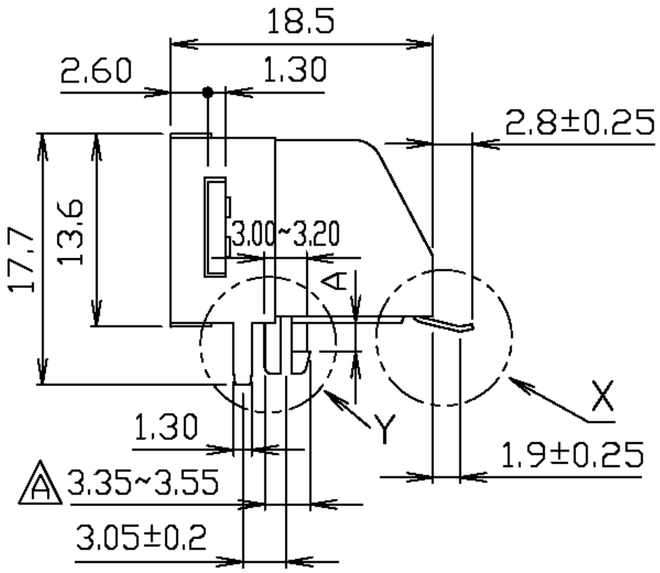

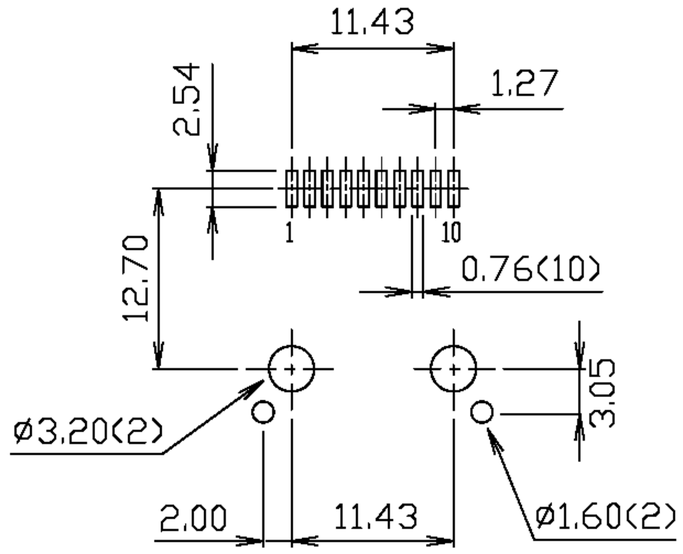

PC Board Layout
Ref.

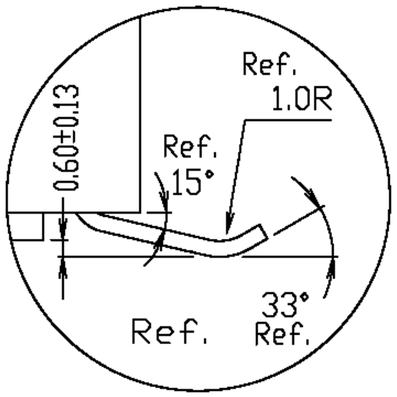

DETAIL X

REVISIONS			
LTR	DESCRIPTION	DATE	APP
A	3.40±0.05	09/22/'00	CHANG
B	6.90	07/02/'01	CHANG
C	3.30	07/02/'01	CHANG
C	3.40	03/29/'02	CHANG

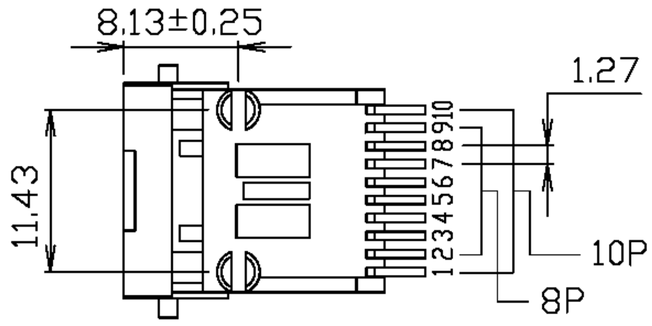

淮洋有限公司 HUAI YANG CO.,LTD.
TEL : 886-2-8261-8986 FAX : 886-2-8261-1885
www.hy1688.com.tw 236新北市土城區中央路二段191號10樓之5

DO NOT SCALE DRAWING	TOLERANCES UNLESS OTHERWISE NOTED	INCH	MM	DR. CIAN.CI.LUO	DATE JAN-17 '08	TITLE 10 & 8POSITION,SHIELDED,SMT-TYPE LOW PROFILE, SIDE ENTRY PCB JACK
THIRD ANGLE PROJECTION	LINEAR MM / INCH	00 ± .01 000 ± .005 0000 ± .002	0.0 ± 0.25 0.00 ± 0.13 0.000 ± 0.05	CK'D M.CHANG	JAN-17 '08	
MM INCH	ANGLE ± 0° 30'	RADII	+ 0.40 − 0.15	APP'D W.J.YANG	JAN-18 '08	SCALE SIZE DWG.NO. 962802 / REV. 7 / SHEET 1