| REV. | ZONE | LTR | DESCRIPTION | DATE | REVISER | APPD. |
|---|---|---|---|---|---|---|
| | | | | | | |

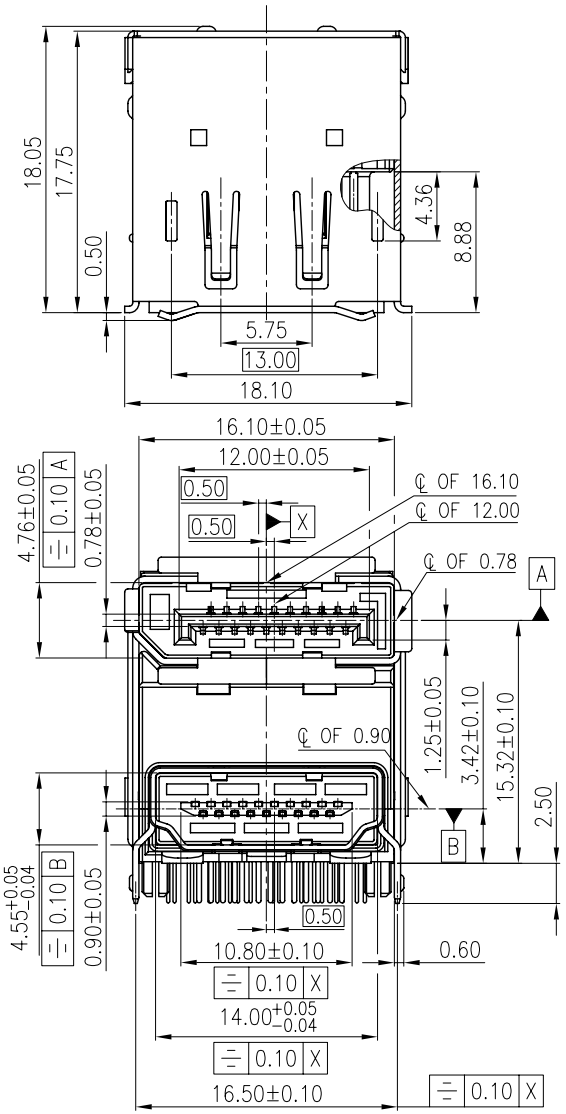


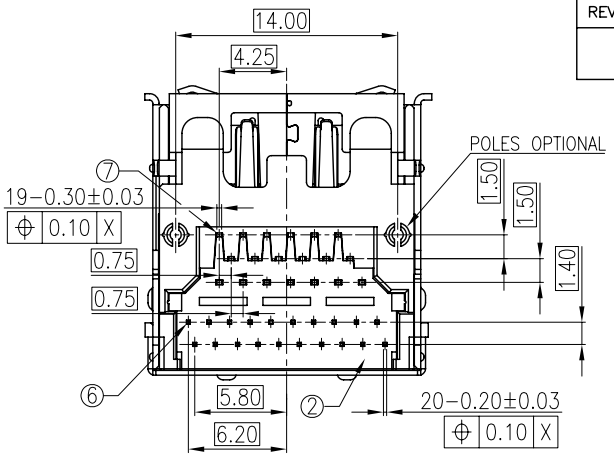


B VIEW
SCALE 1:1

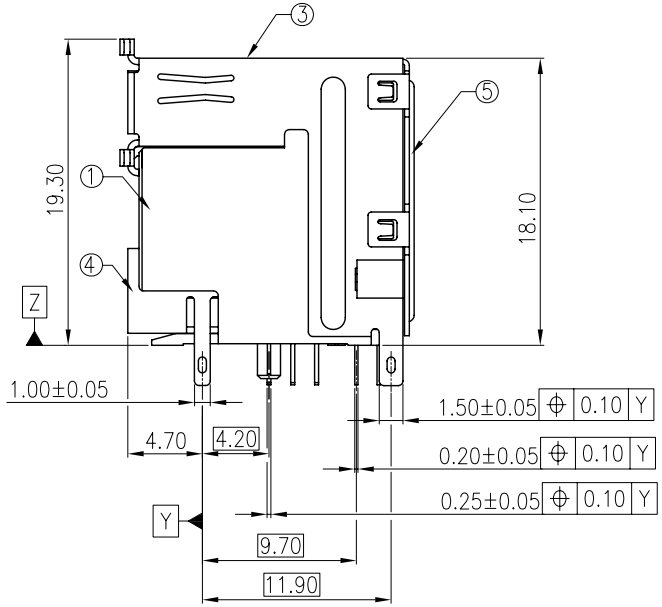


ORDERING INFORMATION

| 62E | HD | S | – | 3 | * | * | * | 1 | – | * | * |
|---|---|---|---|---|---|---|---|---|---|---|---|
| (1) | (2) | (3) | | (4) | (5) | (6) | (7) | | | (8) | (9) |

1.SERIES NO.
62E: DISPLAYPORT ADD HDMI COMBO RECEPTACLE DIP TYPE CONNECTOR
2.PRODUCT CONSTRUCTION TYPE
HD:HDMI+DISPLAYPORT
3.CONTACT&CONNECTIONG TYPES:
S:SOCKET
4.COLOR CODES
3:BLACK
5.CONTACT PLATING:
0:SELECTIVER GOLD FLASH OVER NICKEL
2:SELECTIVER 15u" GOLD OVER NICKEL
3:SELECTIVER 30u" GOLE OVER NICKEL
4:GOLE FLASH ALLOVER OVER NICKEL
6.SHELL CONSTRUCTION
A:SHELL TAIL THROUGH HOLE TYPE WITH RIB
D:SHELL TAIL THROUGH HOLE TYPE WITHOUT RIB
7.SHELL PLATING
N:SOLDERABLE NICKEL PLATED
4:GOLD FLASH PLATED
8.SUFFIX NO.1
P:PVC TRAY PACKAGE
9.SUFFIX NO.2
1.HOUSING AND SPACER MATERIALS IS PBT

TABLE A:

| ITEM | PART NAME | Q'TY | MATERIALS | NOTES |
|---|---|---|---|---|
| ⑦ | HDMI CONTACT | 19 | COPPER ALLOY | SELECTIVER Au OVER Ni |
| ⑥ | DISPLAYPORT CONTACT | 20 | COPPER ALLOY | SELECTIVER Au OVER Ni |
| ⑤ | BACK SHELL | 1 | STEEL | Cu UNDER PLATING Ni OVER |
| ④ | HDMI SHELL | 1 | COPPER ALLOY | Cu UNDER PLATING Ni OVER |
| ③ | DISPLAYPORT SHELL | 1 | COPPER ALLOY | Cu UNDER PLATING Ni OVER |
| ② | SPACER | 1 | THERMOPLASTIC | UL94V−0 |
| ① | HOUSING | 1 | THERMOPLASTIC | UL94V−0 |

MATERIAL: SEE TABLE A

FINISH:

TOLERANCE UNSPECIFIED:
.0 0 0 ±
.0 0 ± 0.15
.0 ± 0.25
. ±
ANGLE ± 1°

DRAWN: Tigertao 10/15−08
DESIGNER: Tigertao 10/15−08
CHECKED: Steven
APPROVED: Peter

淮洋有限公司 HUAI YANG CO., LTD.

SCALE: 3 :1
UNIT: mm

NAME: DISPLAYPORT ADD HDMI COMBO RECEPTACLE DIP TYPE CONNECTOR CUSTOMER DRAWING
SHEET: 1/2
DRAWING NO.: R−S162E−1
REV.: 1.0

A3 RS162E11

| REV. | ZONE | LTR | DESCRIPTION | DATE | REVISER | APPD. |
|---|---|---|---|---|---|---|
| | | | | | | |

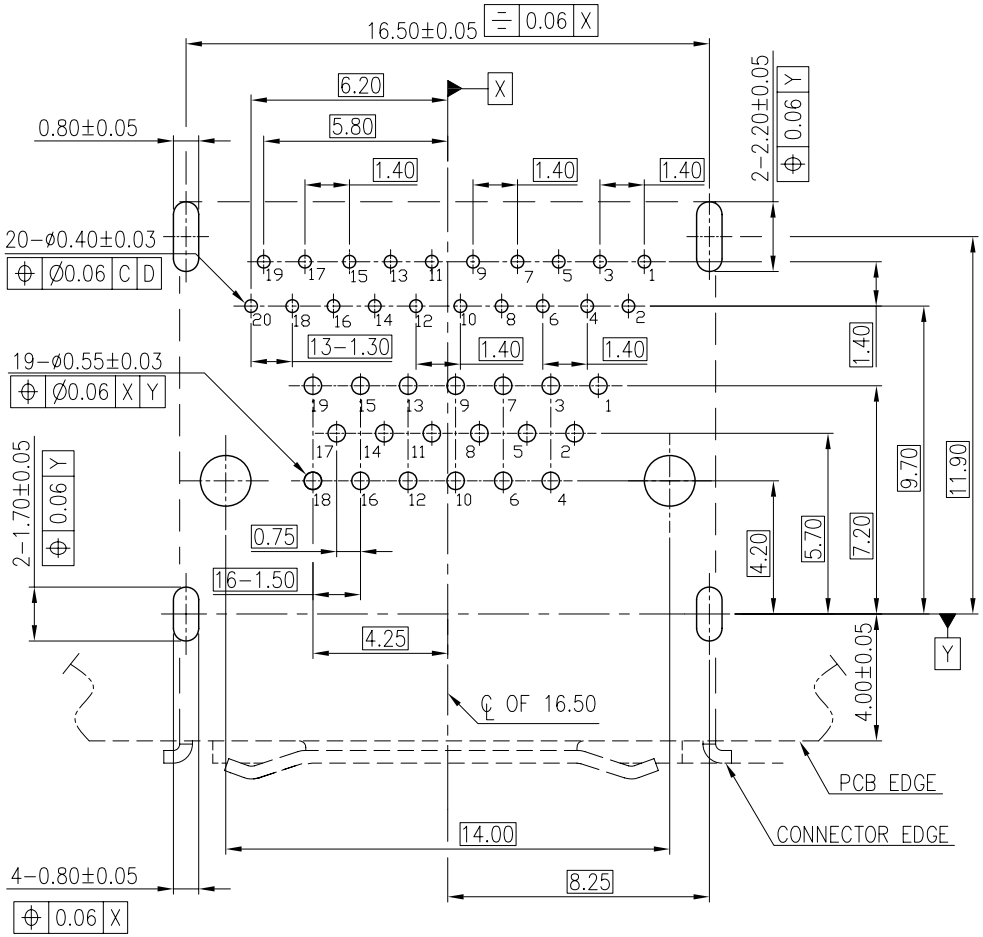


RECOMMENDED PCB LAYOUT (SCALE 2:1)
THICKNESS=1.6±0.10mm

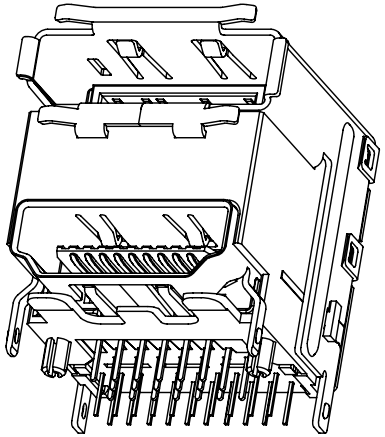

NOTE:

1. MECHANICAL:
   - 1.1 IINSERTION FORCE:
     - 1.1.1 HDMI:44.1N MAX
     - 1.1.2 DISPALYPORT:44.1MAX
   - 2.1 WITHDRAWAL FORCE:
     - 2.1.1 HDMI:9.8N MIN,39.2N MAX
     - 2.1.2 DISPLAYPORT:9.8N MIN,39.2N MAX
2. ELECTRICAL:
   - 2.1 CONTACT CURRENT RATING:
     - 2.1.1 HDMI:0.5A MAX
     - 2.1.2 DISPLAYPORT:0.5A MAX
   - 2.2 VOLTAGE RATING:
     - 2.2.1 HDMI:40V AC(RMS)
     - 2.2.2 DISPLAYPORT:40V AC(RMS)
   - 2.3 WITHSTANDING VOLTAGE(MATED):
     - 2.3.1 HDMI:300V AC(RMS)
     - 2.3.2 DISPLAYPORT:300V AC(RMS)
   - 2.4 INSULATION RESISTANCE(MATED):
     - 2.4.1 HDMI:150V DC
     - 2.4.2 DISPLAYPORT:150V DC
3. ENVIRONMENTAL:
   - 3.1 OPERATING TEMPERATURE:
     - 3.1.1 HDMI:-25° TO +85°
     - 3.1.2 DISPLAYPORT:-25° TO +85°

| | | | |
|---|---|---|---|
| MATERIAL: | TOLERANCE UNSPECIFIED: .0 0 0 ± .0 0 ± 0.15 .0 ± 0.25 . ± ANGLE ± 1° | 淮洋有限公司 HUAI YANG CO., LTD. | SCALE: 3 : 1 / UNIT: mm |
| FINISH: | DRAWN: Tigertao 10/15-08 / DESIGNER: Tigertao 10/15-08 / CHECKED: Steven / APPROVED: Peter | NAME: DISPLAYPORT ADD HDMI COMBO RECEPTACLE DIP TYPE CONNECTOR CUSTOMER DRAWING | SHEET: 2/2 |
| | | DRAWING NO.: R-S162E-1 | REV.: 1.0 |

A3 | RS162E12